PLUMBING ROUGH–IN SIZING CRITERIA

DESIGN.	FIXTURE	PIPE SIZE PER FIXTURE			
		COLD	HOT	WASTE	VENT
WCA/WCB	WATER CLOSET	1"	–	4"	2"
URA/URB	URINAL	3/4"	–	2"	2"
FD/FS	FLOOR DRAIN / FLOOR SINK	–	–	3" OR 4"	2"
LA/HS	LAVATORY, HAND SINK	1/2"	1/2"	2"	2"
FS/TD	FLOOR SINK, TRENCH DRAIN	–	–	2", 3", OR 4"	2"
SK	1 OR 2 COMP. SINK	1/2"	1/2"	2"	2"
–	3 COMP. SINK	1/2"	1/2"	2"	2"
HB	HOSE BIBB	3/4"	–	–	–
NFWH	NON–FREEZE WALL HYDRANT	3/4"	–	–	–
MS	MOP SINK	1/2"	1/2"	2" OR 3"	2"

PLUMBING SYMBOL SCHEDULE

SYMBOL	DESCRIPTION		
SW	SANITARY SEWER		2–WAY CLEANOUT
GW	GREASE WASTE		UNION
	VENT LINE		GATE VALVE
	STORM DRAIN		BALL VALVE OR BALANCING VALVE
D	DRAIN (CONDENSATE)		CHECK VALVE
F	FIRE PROTECTION LINE		STRAINER
DSP	DRY SPRINKLER PIPING		BALANCING VALVE
FDC	FIRE DEPARTMEN CONNX. LINE	NFWH/HB	NON FREEZE WALL HYDRANT/HOSE BIBB
SPR	SPRINKLER PIPING		PRESSURE REDUCING VALVE
G	NATURAL GAS LINE		PRESSURE REDUCING VALVE
PD	PUMPED DISCAHRGE		PRESSURE REDUCING VALVE
	SOFT WATER		GAS COCK
	DOMESTIC COLD WATER		BALANCING VALVE
HP	DOMESTIC HIGH PRESSURE COLD WATER		CONNECT TO EXISTING
		VTR	VENT THRU ROOF
	DOMESTIC HOT WATER	AFF	ABOVE FINISHED FLOOR
	DOMESTIC HOT WATER RETURN	BFF	BELOW FINISHED FLOOR
	DIRECTION OF FLOW	AFG	ABOVE FINISHED GRADE
	DIRECTION OF FALL	CWV	COMBINATION WASTE AND VENT
	PIPE UP	CO	CLEANOUT
	PIPE DOWN	FCO	FLOOR CLEANOUT
	TEE DOWN	FDC	FIRE DEPARTMENT CONNECTION
	P–TRAP	GPM	GALLONS PER MINUTE
	SPRINKLER FLOOR CONTROL VALVE ASSEMBLY	DS	DOWNSPOUT
		RD	ROOF DRAIN
A	AIR LINE	SQFT	SQUARE FEET
C	CONDENSATE LINE		

NOTE:
NOT ALL SYMBOLS AND LINE TYPES MAY BE USED ON PLANS.

WATER SUPPLY CALCULATION

FIXTURE TYPE	QUANTITY	TOTAL DEMAND (FIXTURE UNITS)
WATERCLOSET	8	80.0
LAV	7	7.0
SINK	3	4.5
URINAL	1	5.0
EDF	1	0.5
MOP SINK	1	3.0

TOTAL	100 F.U.
ARE FLUSH VALVES USED?	YES
TOTAL DEMAND:	120 GPM
TOTAL DEVELOPED LENGTH:	500 FEET

PRESSURE LOSS THRU BFP & METER:	15 PSI
PRESSURE LOSS THRU PIPING: MAXIMUM PRESSURE DROP THROUGH PIPING SHALL BE 5 PSI PER 100 FEET OF PIPE.	20 PSI
PRESSURE REQUIRED AT END OF RUN:	25 PSI

REQUIRED RESIDUAL PRESSURE:	60 PSI
KNOWN RESIDUAL PRESSURE:	40 PSI
PUMP PRESSURE BOOST:	25 PSI

PIPE AND INSULATION MATERIALS

1.1 WATER PIPING SYSTEMS

A. COPPER: WATER PIPING SMALLER THAN 4–INCH: SHALL BE TYPE "L" HARD DRAWN, SEAMLESS COPPER WATER TUBE CONFORMING TO ASTM B88, JOINED WITH WROUGHT COPPER SOLDER FITTINGS CONFORMING TO ANSI B16.22. JOINTS SHALL BE MADE USING 95/5 SOLDER (95% TIN, 5% ANTIMONY) EQUIVALENT TO W.M. DUNTON'S, AND A NON–CORROSIVE, PASTE TYPE FLUX. CORED SOLDER WILL NOT BE ALLOWED. SOLDER SHALL BE SOLID STRING OR WIRE TYPE. WHERE SOLDERED COPPER PIPING IS CONNECTED TO THREADED BRASS PIPING, A CAST BRASS ADAPTOR SHALL BE USED.

A.A. EXPOSED PIPING CONNECTED TO FIXTURES AND EQUIPMENT: SHALL BE MADE WITH CHROME PLATED SEAMLESS BRASS TUBE CONFORMING TO ASTM B–135. NO FERROUS PIPING OR MATERIALS WILL BE ALLOWED IN WATER PIPING.

B. CPVC: SCHEDULE 40 PIPE, SUITABLE FOR DOMESTIC WATER APPLICATIONS, FOR CONCEALED PIPING LOCATIONS ONLY. FIXTURE POINTS OF CONNECTIONS SHALL HAVE COPPER OR BRASS CONNECTIONS WITH SUPPORT BRACKETS FOR STUD WALL MOUNTING. EXPOSED PIPING IN MECHANICAL ROOMS, FIRE RISER, PLUMBING, AND OTHER EXPOSED PIPING LOCATIONS SHALL HAVE COPPER PIPING AS OUTLINED BY THIS SPECIFICATION.

1.2 SANITARY DRAINAGE

A. CAST IRON: SOIL, WASTE, AND VENT SANITARY DRAINAGE LINES SHALL BE CAST IRON SOIL PIPE AND FITTINGS, COATED INSIDE AND OUTSIDE, MANUFACTURED IN ACCORDANCE WITH ASTM A–74, AND SHALL BE LABELED WITH THE CAST IRON SOIL PIPE INSTITUTES "MARK OF QUALITY AND PERMANENCE". WEIGHT OF PIPE SHALL BE FABRICATED AS REQUIRED BY CODE FOR LOCATION AND DUTY. JOINTS SHALL BE FABRICATED BY THE USE OF "PUSH–ON" TYPE GASKETED JOINTS (ABOVE OR BELOW GROUND) OR "NO–HUB" MECHANICAL JOINTS (ABOVE GROUND ONLY).

B. PVC: SOIL, WASTE, AND VENT SANITARY DRAINAGE LINES SHALL DRAIN WASTE VENT POLYVINYL CHLORIDE (PVC), SUITABLE FOR WASTE WATER APPLICATIONS. JOINTS SHALL BE HUB AND SPIGOT CONNECTIONS WITH DYE COLORED PRIMER AND SOLVENT CONNECTIONS. PROVIDE SCHEDULE 40 FOR ABOVE SLAB AND SCHEDULE 80 FOR BELOW SLAB PIPING.

C. PVC BELOW SLAB / CAST IRON ABOVE SLAB: FOR ALL SOIL, WASTE, AND VENT SANITARY DRAINAGE PIPING, PROVIDE PVC FOR BELOW SLAB PIPING AND CAST IRON FOR ABOVE SLAB PIPING.

1.3 STORM WATER PIPING

A. STORM WATER PIPING SHALL BE CAST IRON PIPE AS SPECIFIED FOR SANITARY DRAINAGE.

B. INSULATION: INSULATE THE UNDER SIDE OF THE ROOF DRAIN, ALL HORIZONTAL PIPING, AND ELBOWS WITH OWEN'S CORNING VAPORWICK PIPE INSULATION WITH VENTED JACKET. INSULATION SHALL BE 2" THICK.

1.4 CONDENSATE DRAIN PIPING

C. CONDENSATE DRAIN PIPING SHALL BE TYPE "DWV" HARD DRAWN COPPER PIPE WITH CAST OR WROUGHT COPPER DRAINAGE PATTERN FITTINGS, OR MAY BE SCHEDULE 40 GALVANIZED STEEL PIPING WITH GALVANIZED MALLEABLE IRON DRAINAGE PATTERN THREADED FITTINGS.

1.5 GAS PIPING

A. GAS PIPING WITHIN THE BUILDING SHALL BE SCHEDULE 40 BLACK STEEL PIPE WITH BUTT–WELDING OR SOCKET–WELDING FITTINGS, EXCEPT AT EQUIPMENT CONNECTIONS.

B. EQUIPMENT CONNECTIONS SHALL BE MADE WITH GROUND–JOINT UNIONS, AND SHALL BE PROVIDED WITH INDIVIDUAL GAS COCKS. INSTALL UNIONS BETWEEN GAS COCKS AND EQUIPMENT.

C. PROVIDE PROTECTIVE WRAPPING FOR UNDERGROUND PIPING.

PLUMBING GENERAL NOTES:

A. THESE GENERAL NOTES APPLY TO ALL SHEETS WITHIN THIS CONTRACTOR'S SCOPE OF WORK UNLESS SPECIFICALLY NOTED OTHERWISE.

B. ALL WORK SHALL COMPLY WITH APPLICABLE NATIONAL, STATE AND LOCAL CODES, RULES, REGULATIONS AND REQUIREMENTS.

C. ALL WORK SHALL COMPLY WITH THE BUILDING TENANT CONSTRUCTION GUIDE. COORDINATE WITH BUILDING MANAGEMENT/OWNER FOR ACCESS TO ANY TENANT LEASE SPACES THAT MIGHT BE REQUIRED FOR THE INSTALLATION.

D. EXISTING CONDITIONS ARE BASED ON INFORMATION PROVIDED BY THIRD PARTY SURVEY. HOWEVER, IT IS NOT INTENDED TO BE A TRUE REPRESENTATION OF ACTUAL CONDITIONS. CONTRACTOR SHALL VISIT JOB SITE PRIOR TO BIDDING TO ASCERTAIN EXISTING CONDITIONS AND SHALL NOTIFY ARCHITECT OF ANY DISCREPANCIES PRIOR TO BID.

E. PIPING LAYOUT IS SCHEMATIC, EXACT LOCATION OF PIPES TO BE COORDINATED WITH BUILDING STRUCTURE AND WORK OF OTHER CONTRACTORS.

F. CONTRACTOR SHALL COORDINATE PLUMBING ROUGH–IN WITH ARCHITECTURAL DRAWINGS TO PROVIDE EXACT PLUMBING LOCATION FOR FIXTURES.

G. COORDINATE EXACT LOCATION OF ALL WATER AND DRAIN CONNECTIONS FOR EQUIPMENT PROVIDED BY OTHERS.

H. ALL HOT AND COLD WATER COPPER LINES SHALL BE INSULATED WITH ARMAFLEX INSULATION OR OTHER CLOSED CELLULAR FOAM PRODUCT. FIBERGLASS INSULATION AROUND COLD WATER PIPES IS NOT ACCEPTABLE.

I. RUN ALL WATER LINES LEVEL.

J. THIS CONTRACTOR IS TO PROVIDE ALL ADDITIONAL STEEL, HANGER MATERIALS, RODS AND CLAMPS AS REQUIRED FOR COORDINATION WITH WORK OF OTHER TRADES.

K. SUPPORT CAST IRON SANITARY PIPING NOT IN EARTH, ON 5'–0" CENTERS, ALL STEEL PIPING ON 10'–0" CENTERS AND COPPER PIPING ON 8'–0" CENTERS.

L. MAINTAIN A MINIMUM OF 10'–0" BETWEEN DOMESTIC WATER AND SANITARY SEWER PIPING AT BUILDING ENTRANCE.

M. THIS CONTRACTOR IS RESPONSIBLE FOR FIRE STOPPING AT ALL PLUMBING RELATED PENETRATIONS OF FIRE AND SMOKE RATED STRUCTURES, FLOORS AND PARTITIONS. REFER TO ARCHITECTURAL FLOOR PLANS FOR LOCATIONS OF ALL RATED STRUCTURES.

N. ALL FIXTURES TO BE EQUIPPED WITH STOP VALVES IN ACCESSIBLE LOCATION.

O. CONTRACTOR SHALL PROVIDE SHUT–OFF VALVE AT EACH BRANCH LINE CONNECTING TO THE MAIN. PROVIDE BRASS VALVE TAGS WITH DOCUMENTATION IN CLOSEOUT DOCUMENTS.

P. MAIN WATER SHUT–OFFS SHALL BE ACCESSIBLE.

Q. PROVIDE ACCESSIBLE CLEANOUTS AT NOT MORE THAN 50 FEET APART IN HORIZONTAL SANITARY DRAINAGE LINES 4" SIZE OR LESS, AND NOT MORE THAN 100 FEET APART FOR LARGER PIPES.

R. PROVIDE ACCESSIBLE CLEANOUTS AT BASE OF ALL SANITARY STACKS AND OTHER PLACES AS REQUIRED BY CODE.

S. CONTRACTOR SHALL BE RESPONSIBLE FOR DEMOLITION AND REMOVAL OF ALL ABANDONED PLUMBING LINES.

T. INDIRECT DRAINS LARGER THAN 1" SHALL BE SCHEDULE 40 PVC WHERE NOT ROUTED THROUGH RETURN AIR PLENUM.

U. REFER TO PLUMBING SIZING CHART FOR PIPE SIZES NOT SHOWN ON PLAN.

V. WATER HEATER SHALL HAVE BOTH WATER AND ELECTRICAL SHUT–OFFS AT EASILY ACCESSIBLE LOCATIONS.

W. CONTRACTOR SHALL BE RESPONSIBLE FOR DEMOLITION AND REMOVAL OF ALL ABANDONED PLUMBING LINES.

X. GAS PIPING SHALL BE SCHEDULE 40 BLACK STEEL. GAS PIPES SHALL BE ROUTED THROUGH VENTILATED OR OPEN SPACES AS REQUIRED BY CODE.

Y. SCHEDULE 40 PVC PIPE FOR SODA STATION SODA LINES SHALL BE PROVIDE WHERE THEY ARE SPECIFIED TO BE ROUTED UNDERGROUND. PVC PIPE SHALL HAVE LONG SWEEPS FOR ALL ELBOWS.

Z. DOMESTIC HOT WATER MIXING VALVES SHALL BE SET TO 115 DEGREES F. AND INSTALLED IN AN ACCESSIBLE LOCATION ABOVE THE CEILING NEAR THE PLUMBING FIXTURE IT SERVES.

AA. PLUMBING VENTS AND FLUES SHALL BE LOCATED NO LESS THAN 10' FROM OUTSIDE AIR INTAKES AND NO LESS THAN 3' FROM PARAPET WALLS.

AB. MAIN GAS SERVICE LINE SHALL HAVE A MAIN SHUT–OFF VALVE ACCESSIBLE FROM THE OUTSIDE OF THE BUILDING FOR EMERGENCY SHUT–DOWN OF THE GAS SERVICE.

AC. A MANUAL RESET FOR THE AUTOMATIC FIRE SUPPRESSION SYSTEM GAS SHUT–OFF VALVE SHALL BE LOCATED IN AN ACCESSIBLE AREA AND LABELED "MANUAL RESET FOR EMERGENCY GAS SHUT–OFF".

AD. AN ATMOSPHERIC VACUUM BREAKER OR BACKFLOW PREVENTION DEVICE MUST BE INSTALLED ON ALL HOSE BIBBS INSIDE AND OUTSIDE OF THIS BUILDING.

AE. ALL SINKS SHALL HAVE 110 DEGREES F. HOT WATER DISCHARGE TEMPERATURE.

AF. DOMESTIC HOT WATER RECIRCULATION SYSTEMS SHALL BE INSTALLED IN SUCH A WAY THAT THE UN–CIRCULATED PORTION OF PIPING SERVING THE PLUMBING FIXTURE IS MINIMIZED SO THAT HOT WATER IS READILY AVAILABLE IN UNDER.

AG. PLUMBING CONTRACTOR IS RESPONSIBLE FOR COORDINATING ALL EQUIPMENT AND COMPONENTS REQUIRING THE ATTENTION OF OTHER CONTRACTORS. THIS INCLUDES, BUT NOT LIMITED TO, ELECTRICAL REQUIREMENTS, CONDUIT FOR CONTROL WIRE, FIRE ALARM DEVICES, FIRE SPRINKLERS EQUIPMENT, AND PLUMBING CONDENSATE DRAINS.

AH. CONTRACTOR SHALL BE RESPONSIBLE FOR THE CLEAN STORAGE OF EQUIPMENT AND COMPONENTS PRIOR TO INSTALLATION. THIS INCLUDES, BUT NOT LIMITED TO, PROTECTION AGAINST DUST, CORROSION, DIRT, WATER, SUN LIGHT (U.V. RAYS), GENERAL DAMAGE, AND DAMAGE DUE TO ANIMALS.

AI. CONTRACTOR SHALL INSTALL EQUIPMENT AND COMPONENTS IN SUCH A WAY THAT IT DOES NOT IMPEDE NEW OR EXISTING EQUIPMENT CLEARANCES.

AJ. CONTRACTOR SHALL READ AND FOLLOW ALL MANUFACTURER'S INSTALLATION INSTRUCTIONS, GUIDELINES, AND ASSOCIATED DOCUMENTS.

AK. PRIOR TO DIGGING FOR UNDERGROUND UTILITY CONNECTIONS, CONTRACTOR SHALL HAVE ALL UTILITIES LOCATED AND MARKED TO AVOID UNNECESSARY OR EMERGENCY UTILITY SHUT–DOWNS.

AL. ALL MATERIALS IN AN OPEN AIR RETURN SPACE SHALL BE PLENUM RATED.

AM. ALL EQUIPMENT AND COMPONENTS SHALL U.L. RATED OR APPROVED WHERE APPLICABLE. FOREIGN EQUIPMENT AND COMPONENTS NOT U.L. RATED OR APPROVED WILL NOT BE ACCEPTED.

STATE OF TEXAS
KYLE A. HUNTER
121984
LICENSED PROFESSIONAL ENGINEER
2/4

SLI DESIGN, INC.
ARCHITECTURE PLANNING INTERIOR DESIGN
10200 KATY FREEWAY
HOUSTON, TEXAS 77043
713-465-4650
www.sligroup.com

© COPYRIGHT

UNITED COMMUNITY CREDIT UNION
NORTHEAST CORNER OF NORTH SAM HOUSTON PARKWAY EAST AND WOODSON PARK DRIVE, HOUSTON, TX.

PROJECT NUMBER : 8734

ISSUED FOR CLIENT APPROVAL	DATE 08/16/2016
ISSUED FOR BIDDING	09/06/2016
ISSUED FOR PERMIT	09/06/2016
ISSUED FOR CONSTRUCTION	

REVISIONS

MARK	DESCRIPTION	DATE

The information, ideas, designs, details, layouts, techniques, features, arrangements, plans, sequences, dimensions, allowances, tolerances, conceptions, specifications, intentions, technology or embodiments, as illustrated, arranged, displayed, noted, recorded, indicated, represented, disclosed, evidenced, detailed or otherwise reduced to tangible form hereon, either expressly, inherently or by implication, are the confidential and proprietary information of SLI Design, Inc., and shall not be used for any purpose other than the specific project or undertaking identified on the drawing title block or legend for which they are and have been prepared by SLI Design, Inc. Any other reproduction, disclosure or use of any portion of the confidential and proprietary information of SLI Design, Inc., shall be a breach of the obligation of confidence created by the acceptance of this drawing from SLI Design, Inc. for a specific project or Contract. Any copying, duplicating, reproducing, utilization, alteration, modification, revision or change to this drawing, is expressly prohibited unless done with the prior written consent or approval of SLI Design, Inc., and shall not be undertaken without receipt of such prior written approval. This drawing is loaned by SLI Design, Inc., for the limited purpose of complying with a specific Contract. The drawing remains the property of SLI Design, Inc., and shall be returned upon request or completion of the contract, unless specifically authorized by Contract, under which it was loaned.

PRINT DATE

KIS SOLUTIONS, LLC
1835 Locksford Street
Houston, TX 77008
p: 281.900.9680
TBPE #16757

THIS DRAWING SHALL NOT BE REPRODUCED FOR ANY PROJECT OTHER THAN THE ONE NOTED IN THE TITLE BLOCK WITHOUT THE WRITTEN CONSENT OF KIS SOLUTIONS, LLC.
COPYRIGHT 2015, KIS SOLUTIONS, LLC.

DRAWING TITLE: PLUMBING NOTES

DRAWN BY

CHECKED BY

APPROVED BY

SHEET NO. P1.01

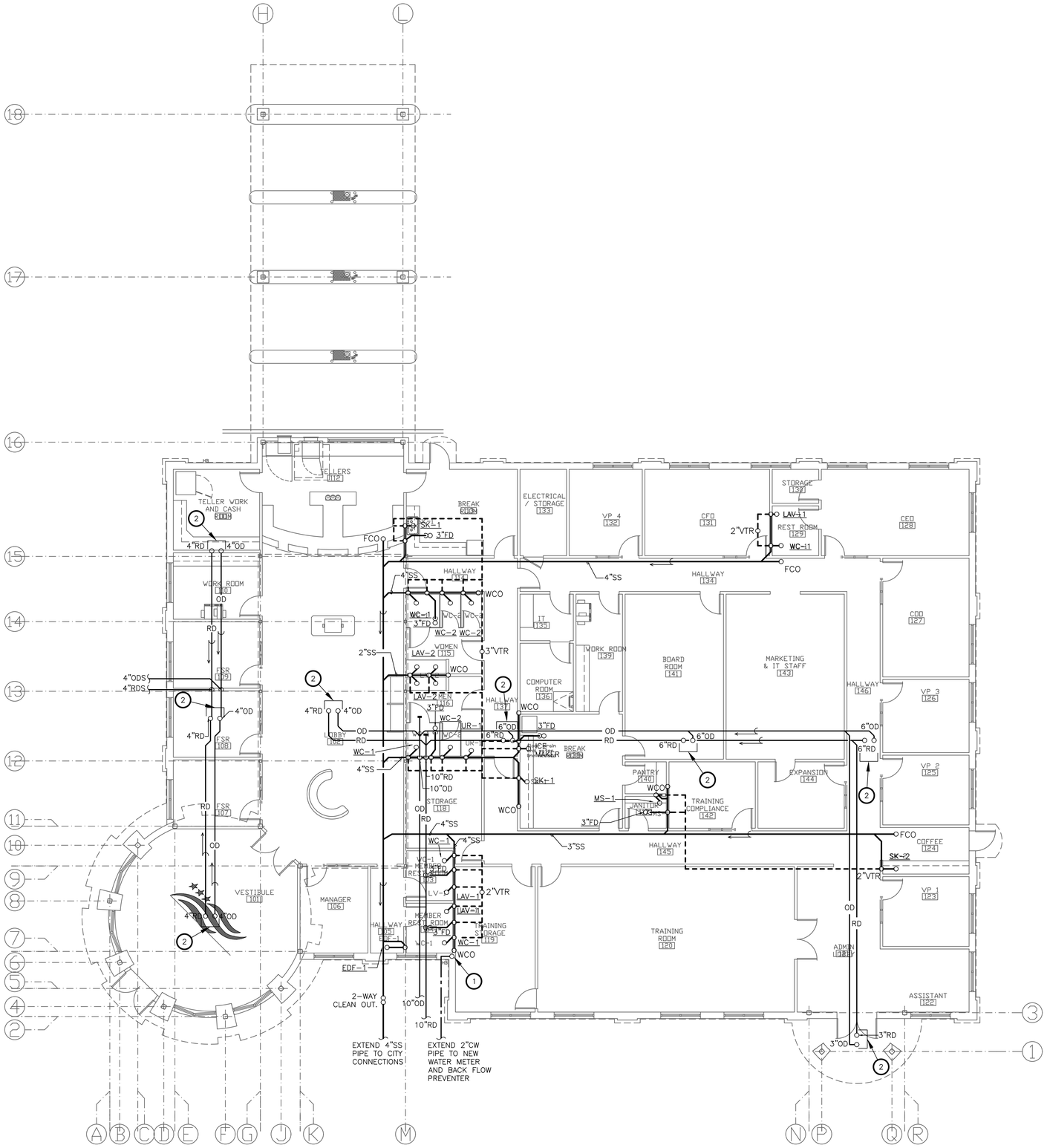

1 SANITARY STORM & VENT FLOOR PLAN
SCALE: 1/8" = 1' - 0"

NOTES TO CONTRACTOR:

1. REFER TO P101 FOR GENERAL NOTES.
2. ALL PIPING IS EXISTING TO REMAIN UNLESS NOTED OTHERWISE.
3. ALL SANITARY WASTE & VENT RISER SIZES SHALL BE FOUND ON P-301.
4. SLOPE OF ALL SANITARY SEWER (SS) PIPE 1/8":1'-0".
5. LOCATE FLOOR CLEAN OUT SUCH THAT IT IS ACCESSIBLE, CONCEALED, AND NOT WITHIN A HIGH TRAFFIC AREA. REFER TO ARCHITECTURAL FOR FINAL FURNITURE PLAN.

NOTES BY SYMBOL (X) :

1. 2" DOMESTIC COLD WATER BUILDING SERVICE SHALL BE MINIMUM 10'-0" AWAY FROM SANITARY SEWER.
2. ROOF DRAIN (RD) & OVERFLOW DRAIN (OD) DROPS FROM ROOF.

SLI DESIGN, INC.
ARCHITECTURE PLANNING INTERIOR DESIGN
10200 KATY FREEWAY
HOUSTON, TEXAS 77043
713-465-4650
www.sligroup.com

© COPYRIGHT

UNITED COMMUNITY CREDIT UNION
NORTHEAST CORNER OF NORTH SAM HOUSTON PARKWAY EAST AND WOODSON PARK DRIVE, HOUSTON, TX.

PROJECT NUMBER : 8734

ISSUED FOR CLIENT APPROVAL	DATE 08/16/2016
ISSUED FOR BIDDING	09/06/2016
ISSUED FOR PERMIT	09/06/2016
ISSUED FOR CONSTRUCTION	

REVISIONS

MARK	DESCRIPTION	DATE

The information, ideas, designs, details, layouts, techniques, features, arrangements, plans, sequences, dimensions, allowances, tolerances, conceptions, specifications, intentions, technology or embodiments, as illustrated, arranged, displayed, noted, recorded, indicated, represented, disclosed, evidenced, detailed or otherwise reduced to tangible form hereon, either expressly, inherently or by implication, are the confidential and proprietary information of SLI Design, Inc., and shall not be used for any purpose other than the specific project or undertaking identified on the drawing title block or legend for which they are and have been prepared by SLI Design, Inc. Any other reproduction, disclosure or use of any portion of the confidential and proprietary information of SLI Design, Inc., shall be a breach of the obligation of confidence created by the acceptance of this drawing from SLI Design, Inc. for a specific project or Contract. Any copying, duplicating, reproducing, utilization, alteration, modification, revision or change to this drawing, is expressly prohibited unless done with the prior written consent or approval of SLI Design, Inc., and shall not be undertaken without receipt of such prior written approval. This drawing is loaned by SLI Design, Inc., for the limited purpose of complying with a specific Contract. The drawing remains the property of SLI Design, Inc., and shall be returned upon request or completion of the contract, unless specifically authorized by Contract, under which it was loaned.

PRINT DATE

KIS SOLUTIONS, LLC
1835 Locksford Street
Houston, TX 77008
p: 281.900.9680
TBPE #16757

THIS DRAWING SHALL NOT BE REPRODUCED FOR ANY PROJECT OTHER THAN THE ONE NOTED IN THE TITLE BLOCK WITH OUT THE WRITTEN CONSENT OF KIS SOLUTIONS, LLC.
COPYRIGHT 2015, KIS SOLUTIONS, LLC.

STATE OF TEXAS
KYLE A. HUNTER
121984
LICENSED PROFESSIONAL ENGINEER
9-2-16

DRAWING TITLE
SANITARY STORM & VENT FLOOR PLAN

DRAWN BY
CHECKED BY
APPROVED BY

SHEET NO.
P2.00

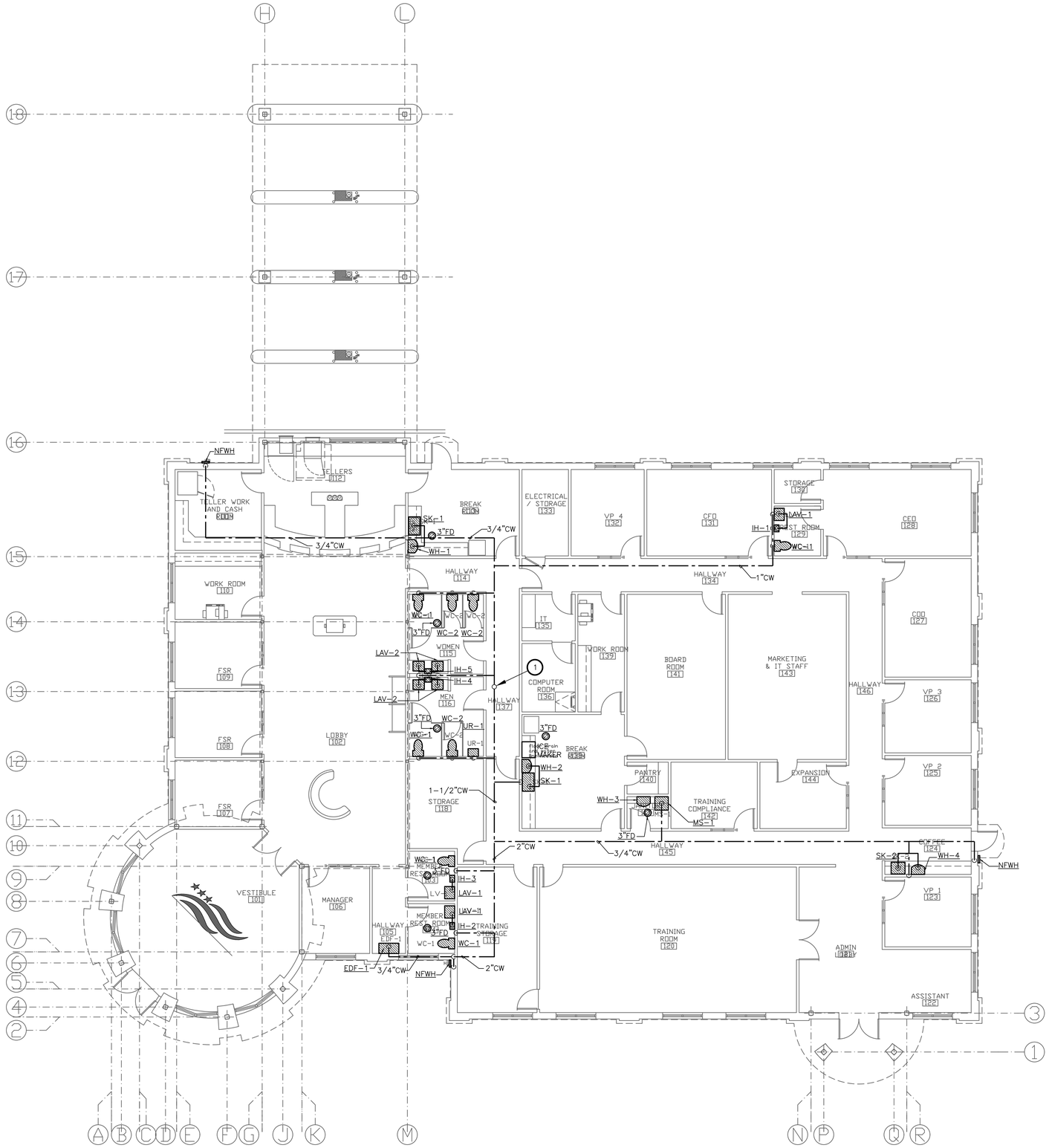

1 DOMESTIC WATER FLOOR PLAN
SCALE: 1/8" = 1' - 0"

NOTES TO CONTRACTOR:

1. REFER TO P101 FOR GENERAL NOTES.
2. ALL PIPING IS EXISTING TO REMAIN UNLESS NOTED OTHERWISE.
3. ALL DOMESTIC WATER DROP SIZES SHALL BE FOUND ON P-302.
4. SLOPE OF ALL SANITARY SEWER (SS) PIPE 1/8":1'-0".
5. LOCATE FLOOR CLEAN OUT SUCH THAT IT IS ACCESSIBLE, CONCEALED, AND NOT WITHIN A HIGH TRAFFIC AREA. REFER TO ARCHITECTURAL FOR FINAL FURNITURE PLAN.

NOTES BY SYMBOL : (X)

1. 3/4"CW UP TO SERVE NON-FREEZE ROOF HYDRANT (NFRH).

SLI DESIGN, INC.
ARCHITECTURE PLANNING INTERIOR DESIGN
10200 KATY FREEWAY
HOUSTON, TEXAS 77043
713-465-4650
www.sligroup.com

© COPYRIGHT

UNITED COMMUNITY CREDIT UNION
NORTHEAST CORNER OF NORTH SAM HOUSTON PARKWAY EAST AND WOODSON PARK DRIVE, HOUSTON, TX.

PROJECT NUMBER : 8734

	DATE
ISSUED FOR CLIENT APPROVAL	08/16/2016
ISSUED FOR BIDDING	09/06/2016
ISSUED FOR PERMIT	09/06/2016
ISSUED FOR CONSTRUCTION	

REVISIONS

MARK	DESCRIPTION	DATE

The information, ideas, designs, details, layouts, techniques, features, arrangements, plans, sequences, dimensions, allowances, tolerances, conceptions, specifications, intentions, technology or embodiments, as illustrated, arranged, displayed, noted, recorded, indicated, represented, disclosed, evidenced, detailed or otherwise reduced to tangible form hereon, either expressly, inherently or by implication, are the confidential and proprietary information of SLI Design, Inc., and shall not be used for any purpose other than the specific project or undertaking identified on the drawing title block or legend for which they are and have been prepared by SLI Design, Inc. Any other reproduction, disclosure or use of any portion of the confidential and proprietary information of SLI Design, Inc., shall be a breach of the obligation of confidence created by the acceptance of this drawing from SLI Design, Inc. for a specific project or Contract. Any copying, duplicating, reproducing, utilization, alteration, modification, revision or change to this drawing, is expressly prohibited unless done with the prior written consent or approval of SLI Design, Inc., and shall not be undertaken without receipt of such prior written approval. This drawing is loaned by SLI Design, Inc., for the limited purpose of complying with a specific Contract. The drawing remains the property of SLI Design, Inc., and shall be returned upon request or completion of the contract, unless specifically authorized by Contract, under which it was loaned.

PRINT DATE

KIS SOLUTIONS, LLC
1835 Locksford Street
Houston, TX 77008
p: 281.900.9680
TBPE #16757

THIS DRAWING SHALL NOT BE REPRODUCED FOR ANY PROJECT OTHER THAN THE ONE NOTED IN THE TITLE BLOCK WITHOUT THE WRITTEN CONSENT OF KIS SOLUTIONS, LLC. COPYRIGHT 2015, KIS SOLUTIONS, LLC

STATE OF TEXAS
KYLE A. HUNTER
121984
LICENSED
PROFESSIONAL ENGINEER
2/14

DRAWING TITLE
DOMESTIC WATER FLOOR PLAN

DRAWN BY
CHECKED BY
APPROVED BY

SHEET NO.
P2.01

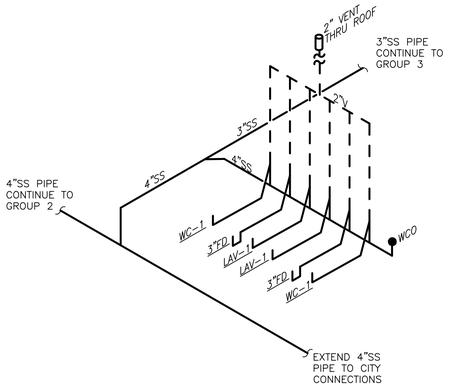

1 SANITARY WASTE AND VENT RISER GROUP 1
SCALE: NTS

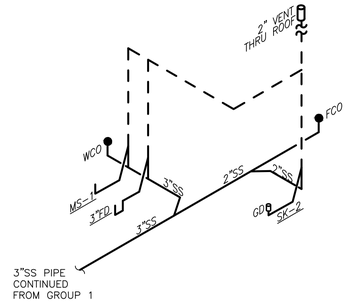

3 SANITARY WASTE AND VENT RISER GROUP 3
SCALE: NTS

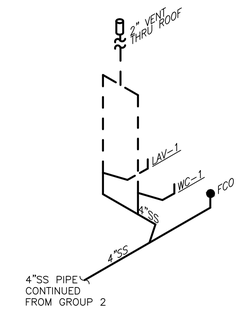

4 SANITARY WASTE AND VENT RISER GROUP 4
SCALE: NTS

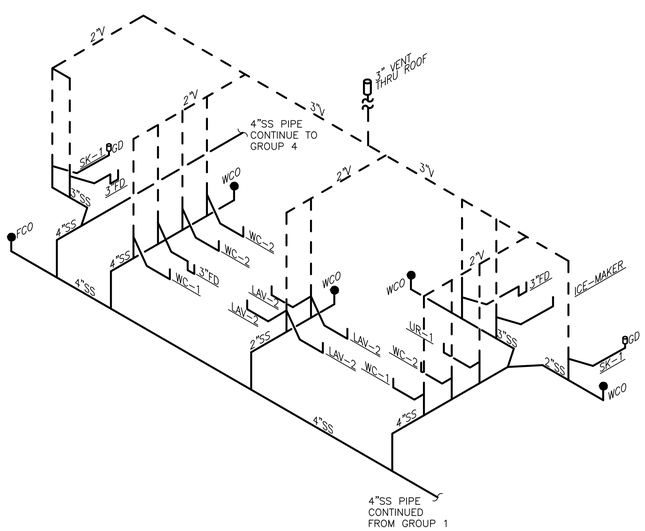

2 SANITARY WASTE AND VENT RISER GROUP 2
SCALE: NTS

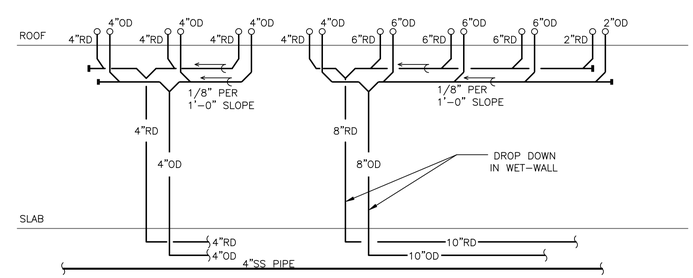

5 STORM DRAINAGE RISER
SCALE: NTS

SLI DESIGN, INC.

ARCHITECTURE PLANNING INTERIOR DESIGN

10200 KATY FREEWAY
HOUSTON, TEXAS 77043
713-465-4650
www.sligroup.com

© COPYRIGHT

UNITED COMMUNITY CREDIT UNION

NORTHEAST CORNER OF NORTH SAM HOUSTON PARKWAY EAST AND WOODSON PARK DRIVE, HOUSTON, TX.

PROJECT NUMBER : 8734

ISSUED FOR CLIENT APPROVAL	DATE 08/16/2016
ISSUED FOR BIDDING	09/06/2016
ISSUED FOR PERMIT	09/06/2016
ISSUED FOR CONSTRUCTION	

REVISIONS

MARK	DESCRIPTION	DATE

The information, ideas, designs, details, layouts, techniques, features, arrangements, plans, sequences, dimensions, allowances, tolerances, conceptions, specifications, intentions, technology or embodiments, as illustrated, arranged, displayed, noted, recorded, indicated, represented, disclosed, evidenced, detailed or otherwise reduced to tangible form hereon, either expressly, inherently or by implication, are the confidential and proprietary information of SLI Design, Inc., and shall not be used for any purpose other than the specific project or undertaking identified on the drawing title block or legend for which they are and have been prepared by SLI Design, Inc. Any other reproduction, disclosure or use of any portion of the confidential and proprietary information of SLI Design, Inc., shall be a breach of the obligation of confidence created by the acceptance of this drawing from SLI Design, Inc. for a specific project or Contract. Any copying, duplicating, reproducing, utilization, alteration, modification, revision or change to this drawing, is expressly prohibited unless done with the prior written consent or approval of SLI Design, Inc., and shall not be undertaken without receipt of such prior written approval. This drawing is loaned by SLI Design, Inc., for the limited purpose of complying with a specific Contract. The drawing remains the property of SLI Design, Inc., and shall be returned upon request or completion of the contract, unless specifically authorized by Contract, under which it was loaned.

PRINT DATE

KIS SOLUTIONS, LLC
1835 Locksford Street
Houston, TX 77008
p: 281.900.9680
TBPE #16757

THIS DRAWING SHALL NOT BE REPRODUCED FOR ANY PROJECT OTHER THAN THE ONE NOTED IN THE TITLE BLOCK WITH OUT THE WRITTEN CONSENT OF KIS SOLUTIONS, LLC.
COPYRIGHT 2015, KIS SOLUTIONS, LLC.

STATE OF TEXAS
KYLE A. HUNTER
121984
LICENSED PROFESSIONAL ENGINEER

DRAWING TITLE
SANITARY STORM AND VENT RISERS

DRAWN BY

CHECKED BY

APPROVED BY

SHEET NO.
P3.01

NOTES TO CONTRACTOR:

1. THE ICE MAKER SHALL BE FURNISHED AND INSTALL WITH INTEGRAL WATER FILTER.

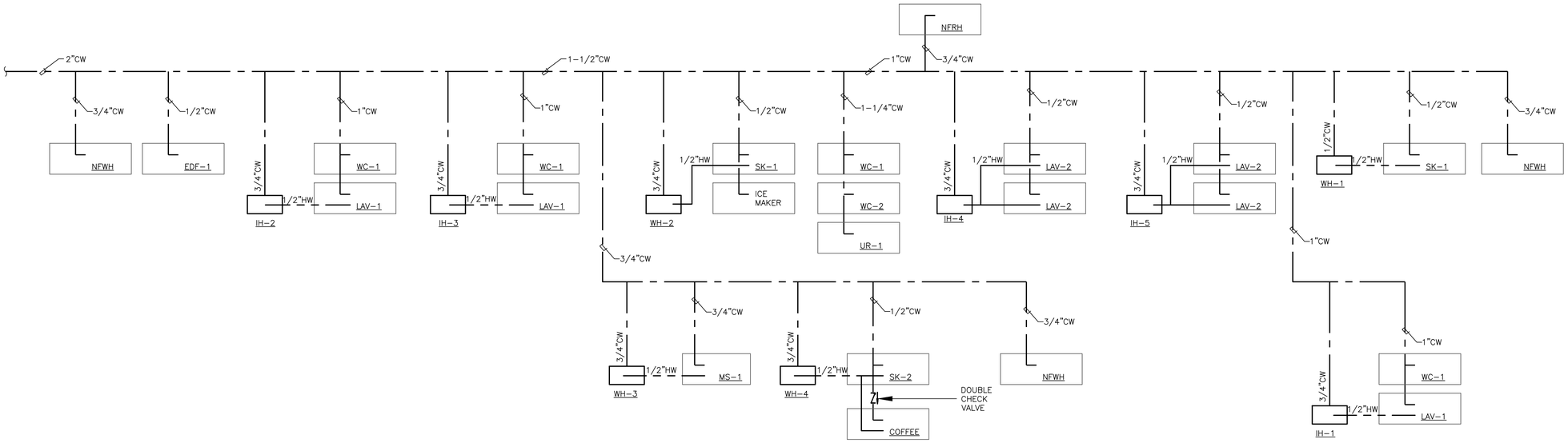

1 DOMESTIC WATER RISER
SCALE: NTS

SLI DESIGN, INC.

ARCHITECTURE PLANNING INTERIOR DESIGN

10200 KATY FREEWAY
HOUSTON, TEXAS 77043
713-465-4650
www.sligroup.com

© COPYRIGHT

UNITED COMMUNITY CREDIT UNION

NORTHEAST CORNER OF NORTH SAM HOUSTON PARKWAY EAST AND WOODSON PARK DRIVE, HOUSTON, TX.

PROJECT NUMBER : 8734

	DATE
ISSUED FOR CLIENT APPROVAL	08/16/2016
ISSUED FOR BIDDING	09/06/2016
ISSUED FOR PERMIT	09/06/2016
ISSUED FOR CONSTRUCTION	

REVISIONS

MARK	DESCRIPTION	DATE

The information, ideas, designs, details, layouts, techniques, features, arrangements, plans, sequences, dimensions, allowances, tolerances, conceptions, specifications, intentions, technology or embodiments, as illustrated, arranged, displayed, noted, recorded, indicated, represented, disclosed, evidenced, detailed or otherwise reduced to tangible form hereon, either expressly, inherently or by implication, are the confidential and proprietary information of SLI Design, Inc., and shall not be used for any purpose other than the specific project or undertaking identified on the drawing title block or legend for which they are and have been prepared by SLI Design, Inc. Any other reproduction, disclosure or use of any portion of the confidential and proprietary information of SLI Design, Inc., shall be a breach of the obligation of confidence created by the acceptance of this drawing from SLI Design, Inc. for a specific project or Contract. Any copying, duplicating, reproducing, utilization, alteration, modification, revision or change to this drawing, is expressly prohibited unless done with the prior written consent or approval of SLI Design, Inc., and shall not be undertaken without receipt of such prior written approval. This drawing is loaned by SLI Design, Inc., for the limited purpose of complying with a specific Contract. The drawing remains the property of SLI Design, Inc., and shall be returned upon request or completion of the contract, unless specifically authorized by Contract, under which it was loaned.

PRINT DATE

KIS SOLUTIONS, LLC
1835 Locksford Street
Houston, TX 77008
p: 281.900.9680
TBPE #16757

THIS DRAWING SHALL NOT BE REPRODUCED FOR ANY PROJECT OTHER THAN THE ONE NOTED IN THE TITLE BLOCK WITH OUT THE WRITTEN CONSENT OF KIS SOLUTIONS, LLC.
COPYRIGHT 2015, KIS SOLUTIONS, LLC.

STATE OF TEXAS
KYLE A. HUNTER
121984
LICENSED PROFESSIONAL ENGINEER
9/2/16

DRAWING TITLE
DOMESTIC WATER RISERS

DRAWN BY

CHECKED BY

APPROVED BY

SHEET NO.
P3.02

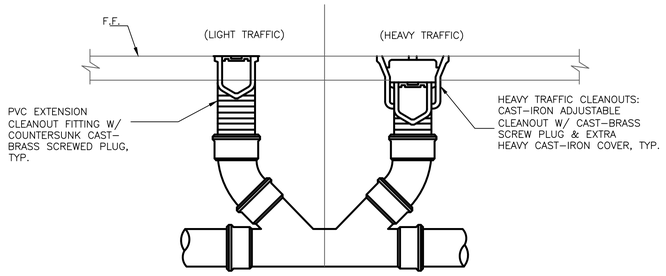

01 CLEANOUT DETAIL
NOT TO SCALE

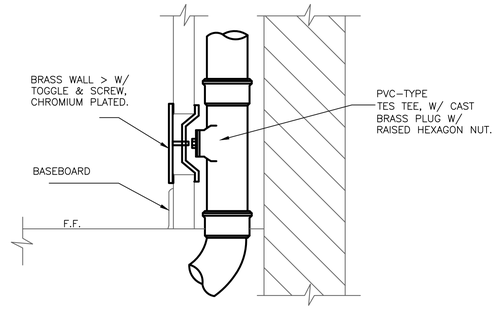

02 WALL CLEANOUT
NOT TO SCALE

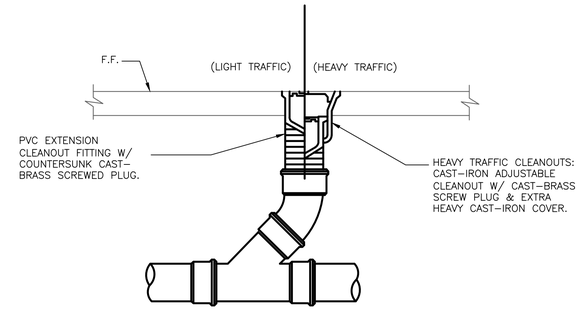

03 FLOOR CLEANOUT
NOT TO SCALE

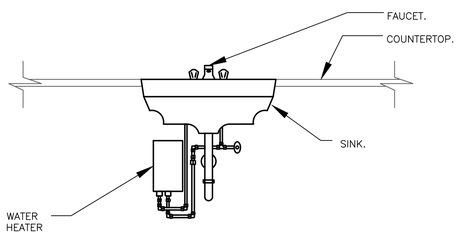

04 INSTANT HOT SINGLE LAVATORY WATER HEATER
NOT TO SCALE

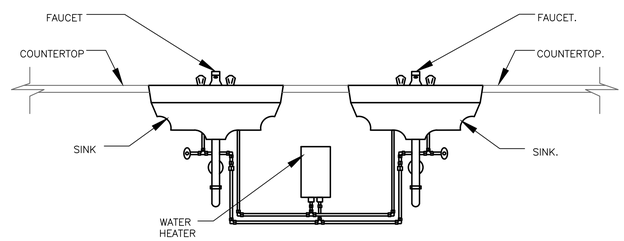

05 INSTANT HOT DOUBLE LAVATORY WATER HEATER
NOT TO SCALE

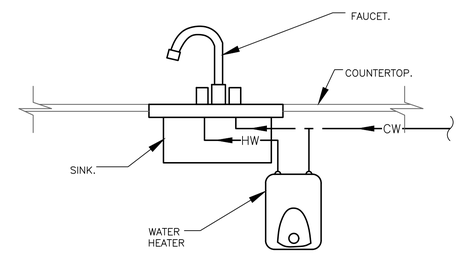

06 MINI TANK WATER HEATER
NOT TO SCALE

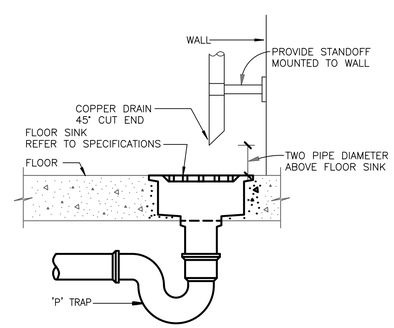

07 FLOOR SINK DETAIL
NOT TO SCALE

SLI DESIGN, INC.
ARCHITECTURE PLANNING INTERIOR DESIGN
10200 KATY FREEWAY
HOUSTON, TEXAS 77043
713-465-4650
www.sligroup.com
© COPYRIGHT

UNITED COMMUNITY CREDIT UNION
NORTHEAST CORNER OF NORTH SAM HOUSTON PARKWAY EAST AND WOODSON PARK DRIVE, HOUSTON, TX.

PROJECT NUMBER : 8734

ISSUED FOR CLIENT APPROVAL	DATE 08/16/2016
ISSUED FOR BIDDING	09/06/2016
ISSUED FOR PERMIT	09/06/2016
ISSUED FOR CONSTRUCTION	

REVISIONS

MARK	DESCRIPTION	DATE

The information, ideas, designs, details, layouts, techniques, features, arrangements, plans, sequences, dimensions, allowances, tolerances, conceptions, specifications, intentions, technology or embodiments, as illustrated, arranged, displayed, noted, recorded, indicated, represented, disclosed, evidenced, detailed or otherwise reduced to tangible form hereon, either expressly, inherently or by implication, are the confidential and proprietary information of SLI Design, Inc., and shall not be used for any purpose other than the specific project or undertaking identified on the drawing title block or legend for which they are and have been prepared by SLI Design, Inc. Any other reproduction, disclosure or use of any portion of the confidential and proprietary information of SLI Design, Inc., shall be a breach of the obligation of confidence created by the acceptance of this drawing from SLI Design, Inc. for a specific project or Contract. Any copying, duplicating, reproducing, utilization, alteration, modification, revision or change to this drawing, is expressly prohibited unless done with the prior written consent or approval of SLI Design, Inc., and shall not be undertaken without receipt of such prior written approval. This drawing is loaned by SLI Design, Inc., for the limited purpose of complying with a specific Contract. The drawing remains the property of SLI Design, Inc., and shall be returned upon request or completion of the contract, unless specifically authorized by Contract, under which it was loaned.

PRINT DATE

KIS SOLUTIONS, LLC
1835 Locksford Street
Houston, TX 77008
p: 281.900.9680
TBPE #16757
THIS DRAWING SHALL NOT BE REPRODUCED FOR ANY PROJECT OTHER THAN THE ONE NOTED IN THE TITLE BLOCK WITHOUT THE WRITTEN CONSENT OF KIS SOLUTIONS, LLC.
COPYRIGHT 2015, KIS SOLUTIONS, LLC

STATE OF TEXAS
KYLE A. HUNTER
121984
LICENSED
PROFESSIONAL ENGINEER
2/14

DRAWING TITLE
PLUMBING DETAILS

DRAWN BY
CHECKED BY
APPROVED BY

SHEET NO.
P4.01

PLUMBING FIXTURE SCHEDULE

DESIGNATION	FIXTURE	MANUFACTURER AND MODEL NO.	DESCRIPTION, TRIM AND NOTES	ACCESSORIES	PRODUCED BY	INSTALLED BY
WC-1	WATER CLOSET	KOHLER HIGHCREST BOWL MODEL # K-4302	VITREOUS CHINA, 10" (254 MM) OR 12" (305 MM) ROUGH-IN, 1-1/2" TOP SPUD, 11-3/8" (289 MM) X 10-3/8" (264 MM) WATER AREA, 2-1/4" 57 MM) PASSAGEWAY, 1.6 GPF (6 LPF), 26" (660 MM) X 14-1/2" (368 MM) X 16-1/2" (419 MM).	K-4670-C LUSTRA COMMERCIAL TOILET SEAT, K-4670-CA COMMERCIAL TOILET SEAT, K-10674 WAVE DC 1.6 GPF WC FLUSHOMETER, K-10957 TRIPOINT™ DC 1.6 GPF WC FLUSHOMETER, K-13516 MANUAL 1.6 GPF WC FLUSHOMETER, 111-1.28 ROYAL MODEL FLUSHOMETER, AMERICAN STANDARD SELECTRONIC SENSOR-OPERATED TOILET FLUSH VALVE, 1.28 GPF BATTERY POWERED MODEL # 6065.121.002, 6065.525.002	G.C.	G.C.
WC-2	WATER CLOSET	KOHLER HIGHCREST BOWL MODEL # K-4302	VITREOUS CHINA, 10" (254 MM) OR 12" (305 MM) ROUGH-IN, 1-1/2" TOP SPUD, 11-3/8" (289 MM) X 10-3/8" (264 MM) WATER AREA, 2-1/4" 57 MM) PASSAGEWAY, 1.6 GPF (6 LPF), 26" (660 MM) X 14-1/2" (368 MM) X 16-1/2" (419 MM).	K-4670-C LUSTRA COMMERCIAL TOILET SEAT, K-4670-CA COMMERCIAL TOILET SEAT, K-10674 WAVE DC 1.6 GPF WC FLUSHOMETER, K-10957 TRIPOINT™ DC 1.6 GPF WC FLUSHOMETER, K-13516 MANUAL 1.6 GPF WC FLUSHOMETER, 111-1.28 ROYAL MODEL FLUSHOMETER, AMERICAN STANDARD SELECTRONIC SENSOR-OPERATED TOILET FLUSH VALVE, 1.28 GPF BATTERY POWERED MODEL # 6065.121.002, 6065.525.002	G.C.	G.C.
LAV-1	LAVATORY	KOHLER WALL MOUNT BATHROOM SINK K-2035-4, K-2035-8, K-2035-1, WITH SPOUTS & FAUCETS	VITREOUS CHINA LAVATORY. WALL MOUNT. BATHROOM SINK SHALL BE 22" IN LENGTH, 18" IN WIDTH & 34" IN HEIGHT. BATHROOM SINK SHALL HAVE 8" CENTERS, 4" CENTERS OR SINGLE HOLE. BATHROOM SINK SHALL HAVE OVERFLOW.	AMERICAN STANDARD MARQUETTE DUAL CONTROL WIDESPREAD BATH FAUCET. MODEL # 7768F, 7768SF, 7768EBF WIDESPREAD LAVATORY,	G.C.	G.C.
LAV-2	LAVATORY	AMERICAN STANDARD AQUALYN COUNTER TOP SINK. MODEL # 0476.028, 0476.037 & 0475.035	VITREOUS CHINA LAVATORY. SELF-RIMMING WITH CUTOUT TEMPLATE SUPPLIED,FRONT OVERFLOW, WALL MOUNT, FAUCET LEDGE. PROVIDE P-TRAP WITH CLEANOUTS.	AMERICAN STANDARD MARQUETTE DUAL CONTROL WIDESPREAD BATH FAUCET. MODEL # 7768F, 7768SF, 7768EBF WIDESPREAD LAVATORY.	G.C.	G.C.
HANDS FREE FAUCET	LAV-1,LAV-2 HANDS FREE FAUCET	AMERICAN STANDARD INNSBROOK SELECTRONIC ELECTRONIC PROXIMITY LAVATORY FAUCET CAST BRASS SPOUT MODEL # PWRX LONG-LIFE BATTERY POWERED-6053.205, 6053.202.	PWRX LONG-LIFE BATTERY SYSTEM: BATTERY LIFE - 480,000 CYCLES (10 YEARS @ 4,000 CYCLES PER MONTH). ADVANCED BATTERY & ELECTRONICS REDUCE THE DOWNTIME AND MAINTENANCE COSTS ASSOCIATED WITH CHANGING BATTERIES. SAFETY CIRCUITRY PREVENTS OVERHEATING IN CASE OF SHORT CIRCUIT AND PROTECTS THE ELECTRONICS FROM DAMAGE. DC (BATTERY): INCLUDES CR-P2 LITHIUM BATTERY. BATTERY LIFE - 192,000 CYCLES (4 YEARS @ 4,000 CYCLES PER MONTH). PLUG-IN AC: INCLUDES CLASS 2 UL CERTIFIED UNIVERSAL PLUG-IN AC TRANSFORMER WITH 6' LONG POWER CORD. HARD-WIRED AC: INCLUDES CLASS 2 UL CERTIFIED UNIVERSAL HARD-WIRED AC TRANSFORMER (ELECTRICAL BOX BY OTHERS). MULTI-AC: ONE AC TRANSFORMER CAN POWER UP TO 15 FAUCETS AND/OR FLUSH VALVES IN A DAISY CHAIN CONFIGURATION. POWER SUPPLY NOT INCLUDED.	---	G.C.	G.C.
EDF-1	BARRIER FREE COOLER	HALSEY TAILOR HAC8FSBL-Q ADA, HACFSDBL-L/R ADA	SELF-CONTAINED, ELECTRIC REFRIGERATED, BI-LEVEL WALL-MOUNTED WATER COOLER	CABINET, COOLER TOP, BUBBLER, PUSH BAR ACTUATION MECHANISM, AUTOMATIC STREAM HT. REGULATOR, INLET STRAINER, TEMPERATURE CONTROL, STORAGE TANK, REFRIGERATION SYSTEM.	G.C.	G.C.
MS-1	MOP SERVICE SINK	MOLDED STONE MOP SERVICE BASIN. MODEL # MSB 2424, MSB 3624	THE MSB 2424 & MSB 3624 SHALL HAVE OUTER DIMENSIONS AS 24"X24"X10" & 36"X24"X10" RESPECTIVELY. THE MOLDING SHALL BE DONE IN MATCHED METAL DIES UNDER HEAT & PRESSURE RESULTING IN 1 PIECE HOMOGENEOUS PRODUCT. 1" WIDTH-10" HIGH WALLS, CAULK CONNECTION OR QDC 3 JOINT WITH 3" DRAIN PIPE	FIAT SERVICE SINK FAUCET MODEL # 830-AA	G.C.	G.C.
SK-1	2 COMP. SINK	ELKAY SPECIFICATIONS CELEBRITY DOUBLE BOWL SINK MODEL # GECR3321	BOWL DEPTH:5-3/8", COVED CORNERS: 3" VERTICAL RADIUS, 2-1/4" HORIZONTAL RADIUS, UNDERSIDE: FULLY UNDERCOATED TO DAMPEN SOUND & PREVENT CONDENSATION. NOTE: UNLESS OTHERWISE SPECIFIED, SINK IS FURNISHED WITH 4 FAUCET HOLES.	OPTIONAL ACCESSORIES : CUTTING BOARD, RINSING BASKETS, UTENSILS CADDY FOR RINSING BASKETS, BOTTOM GRID, DRAIN FITTING. AMERICAN STANDARD COLONY SOFT KITCHEN CONTROL WITH PULL-DOWN FAUCET MODEL # 4175.300, 4175.300.F15 & INSINKERATOR BADGER FOOD WASTE DISPOSER.	G.C.	G.C.
SK-2	HOSPITALITY SINK	DAYTON SPECIFICATIONS HOSPITALITY SINK & SINK PACKAGE MODEL # D11515, D11516 & DP211515C	SINK IS FORMED OF #23 GAUGE, 300 SERIES, NICKEL BEARING STAINLESS STEEL. BOWL DEPTH:5-3/8", COVED CORNERS: 2-1/4" VERTICAL & HORIZONTAL RADIUS, FINISH: EXPOSED SURFACES ARE POLISHED TO A SATIN FINISH. UNDERSIDE: UNDERCOATED	AMERICAN STANDARD COLONY SOFT TWO-HANDLE CENTERSET BAR SINK FAUCET WITH BRASS GOOSENECK SPOUT MODEL # 2475.500	G.C.	G.C.
UR-1	URINAL	AMERICAN STANDARD WASHBROOK FLOWISE MODEL # 6590.005	VITREOUS CHINA, WALL HUNG, FLUSHING RIM, WASHOUT FLUSH ACTION, 3/4" INLET SPUD, 2 WALL HANGERS, HIGH EFFICIENCY, WASHOUT FLUSH ACTION, 0.5 GALLON/FLUSH WITH OPTIONAL STAINLESS STEEL STRAINER AND JOSAM CARRIER.	SLOAN ROYAL 186.0.5 FLUSH VALVE, AMERICAN STANDARD SELECTRONIC SENSOR-OPERATED URINAL FLUSH VALVE, 0.125 GPF BATTERY POWERED MODEL # 6063.013.002, 6063.513.002	G.C.	G.C.
GD	GARBAGE DISPOSAL	IN-SINK-ERATOR BADGER 5	1/2 HORSEPOWER 120v/1ph HEAVY DUTY MOTOR (QUIET DURA-DRIVE INDUCTION MOTOR),WE COME TO YOU 2-YEAR IN-HOME LIMITED WARRANTY, RUGGED GALVANIZED STEEL CONSTRUCTION (FOR DISPOSER DURABILITY),SPACE-SAVING COMPACT DESIGN	---	G.C.	G.C.
FD	FLOOR DRAIN	JOSAM SERIES 30000-A	CAST IRON DRAIN WITH SATIN NIKALOY STRAINER, CAST IRON FLASHING COLLAR AND TRAP PRIMER CONNECTION.	---	G.C.	G.C.
FS	FLOOR SINK	JOSAM SERIES 49320A-NB-3-55	FLOOR SINK WITH CAST IRON BODY, 12'' X 12'' TOP SIZE WITH 1/2 CAST IRON GRATE AND TRAP PRIMER CONNECTION.	---	G.C.	G.C.
FCO	FLOOR CLEANOUT	JOSAM SERIES 57000	CAST IRON BODY WITH POLISHED BRASS COVER.	---	G.C.	G.C.
WCO	WALL CLEANOUT	JOSAM SERIES 58910	COATED CAST IRON CLEANOUT TEE WITH RECESSED, TAPPED PLUG AND POLISHED STAINLESS STEEL COVER (SERIES 58600).	---	G.C.	G.C.
HSA	HYDRAULIC SHOCK ABSORBER	JOSAM SERIES 75000	WROUGHT COPPER SHELL SIZE AND LOCATE IN ACCORDANCE WITH P.D.I. STANDARDS.	---	G.C.	G.C.
NFWH	NON-FREEZE WALL HYDRANT	JOSAM SERIES 71000	CAST BRONZE NON-FREEZE WALL HYDRANT WITH T-HANDLE, SATIN FINISH NIKALOY BOX, HINGED LATCHING COVER, BRONZE CASTING, NEOPRENE PLUNGERS, REMOVABLE NYLON SEATS, REMOVABLE BRONZE OPERATING PARTS, ¾'' FEMALE AND 1'' MALE N.P.T. INLET CONNECTION FOR COLD WATER AND A ¾'' H.P.T OUTLET.	---	G.C.	G.C.
NFRH	NON-FREEZE ROOF HYDRANT	WOODFORD #Y34	GALVANIZED STEEL NON-FREEZE POST-MOUNTED HYDRANT WITH ¾" FEMALE N.P.T. INLET, ¾" H.P.T. OUTLET AND ½" DRAIN CONNECTION ROUTED TO THE NEAREST FLOOR DRAIN/SINK.	ROOF MOUNTING ACCESSORIES AND ALL REPAIRS CAN BE MADE FROM TOP WITHOUT REMOVING HYDRANT FROM MOUNTING.	G.C.	G.C.
RD	ROOF DRAIN	JOSAM SERIES 21500-1-22	ROOF DRAIN WITH CAST IRON DOME, DECK CLAMP AND DRAIN RECEIVER.	---	G.C.	G.C.
OD	ROOF DRAIN (OVERFLOW)	JOSAM SERIES 21500-1-22	ROOF DRAIN WITH CAST IRON DOME, DECK CLAMP, DRAIN RECEIVER, AND 2" STAND PIPE.	---	G.C.	G.C.

NOTES:

ALL FAUCETS BEING SERVED BY HOT WATER MUST HAVE A HIGH-TEMPERATURE MAXIMUM OF 110 DEG. F AND BE PROVIDED WITH A POINT-OF-USE THERMOSTATIC MIXING VALVE COMPLIANT WITH ASSE 1070. ALL SHOWERS/TUBS SHALL HAVE COMBINATION CONTROL VALVES COMPLIANT WITH ASSE 1016.

ELECTRIC WATER HEATER SCHEDULE

DESIGNATION	PLUMBING						ELECTRICAL	
	SERVICE	STORAGE (GAL)	RECOVERY (GPH)	DEGREE RISE	LEAVING WATER TEMP (°F)	EQUAL TO BASIS OF DESIGN MFR. & MODEL #	INPUT (KW)	VOLTAGE / PHASE / FLA PER PHASE
WH-1	BREAKROOM	2.5	---	50	108	EEMAX-EMT2.5	1.44	120/1/12
WH-2	BREAKROOM	2.5	---	50	108	EEMAX-EMT2.5	1.44	120/1/12
WH-3	JANITOR	2.5	---	50	108	EEMAX-EMT2.5	1.44	120/1/12
WH-4	COFFEE	2.5	---	50	108	EEMAX-EMT2.5	1.44	120/1/12
IH-1	RESTROOM	1.8	18	41	108	EEMAX-SP3277	3.0	277/1/11
IH-2	RESTROOM	1.8	18	41	108	EEMAX-SP3277	3.0	277/1/11
IH-3	RESTROOM	1.8	18	41	108	EEMAX-SP3277	3.0	277/1/11
IH-4	RESTROOM	1.8	18	41	108	EEMAX-SP3277	3.0	277/1/11
IH-5	RESTROOM	1.8	18	41	108	EEMAX-SP3277	3.0	277/1/11

NOTES:

1)REFER TO SPECIFICATIONS FOR ADDITIONAL REQUIREMENTS.
2)All SUBSTITUTIONS MUST BE APPROVED, IN WRITING, PRIOR TO BID.

STATE OF TEXAS
KYLE A. HUNTER
121984
LICENSED
PROFESSIONAL ENGINEER
2/14

SLI DESIGN, INC.
ARCHITECTURE PLANNING INTERIOR DESIGN
10200 KATY FREEWAY
HOUSTON, TEXAS 77043
713-465-4650
www.sligroup.com

© COPYRIGHT

UNITED COMMUNITY CREDIT UNION
NORTHEAST CORNER OF NORTH SAM HOUSTON PARKWAY EAST AND WOODSON PARK DRIVE, HOUSTON, TX.

PROJECT NUMBER : 8734

ISSUED FOR CLIENT APPROVAL	DATE 08/16/2016
ISSUED FOR BIDDING	09/06/2016
ISSUED FOR PERMIT	09/06/2016
ISSUED FOR CONSTRUCTION	

REVISIONS

MARK	DESCRIPTION	DATE

The information, ideas, designs, details, layouts, techniques, features, arrangements, plans, sequences, dimensions, allowances, tolerances, conceptions, specifications, intentions, technology or embodiments, as illustrated, arranged, displayed, noted, recorded, indicated, represented, disclosed, evidenced, detailed or otherwise reduced to tangible form hereon, either expressly, inherently or by implication, are the confidential and proprietary information of SLI Design, Inc., and shall not be used for any purpose other than the specific project or undertaking identified on the drawing title block or legend for which they are and have been prepared by SLI Design, Inc. Any other reproduction, disclosure or use of any portion of the confidential and proprietary information of SLI Design, Inc., shall be a breach of the obligation of confidence created by the acceptance of this drawing from SLI Design, Inc. for a specific project or Contract. Any copying, duplicating, reproducing, utilization, alteration, modification, revision or change to this drawing, is expressly prohibited unless done with the prior written consent or approval of SLI Design, Inc., and shall not be undertaken without receipt of such prior written approval. This drawing is loaned by SLI Design, Inc., for the limited purpose of complying with a specific Contract. The drawing remains the property of SLI Design, Inc., and shall be returned upon request or completion of the contract, unless specifically authorized by Contract, under which it was loaned.

PRINT DATE

KIS SOLUTIONS, LLC
1835 Locksford Street
Houston, TX 77008
p: 281.900.9680
TBPE #16757

THIS DRAWING SHALL NOT BE REPRODUCED FOR ANY PROJECT OTHER THAN THE ONE NOTED IN THE TITLE BLOCK WITH OUT THE WRITTEN CONSENT OF KIS SOLUTIONS, LLC. COPYRIGHT 2015, KIS SOLUTIONS, LLC.

DRAWING TITLE
PLUMBING SCHEDULES

DRAWN BY

CHECKED BY

APPROVED BY

SHEET NO.
P5.01

DIVISION 22 - PLUMBING

SECTION 220500 - COMMON WORK RESULTS
PART 1 - GENERAL
1.1 GENERAL NOTES
A. DRAWINGS AND GENERAL PROVISIONS OF THE CONTRACT, INCLUDING GENERAL AND SUPPLEMENTARY CONDITIONS AND ALL OTHER SPECIFICATION SECTIONS, APPLY TO THIS AND THE OTHER SECTIONS OF DIVISION 22.
B. THE CONTRACTOR FOR THIS DIVISION OF WORK IS REQUIRED TO OBTAIN A COMPLETE SET OF BID DOCUMENTS (DRAWINGS AND SPECIFICATIONS) AND FULLY REVIEW THEM. COORDINATE DIVISION 22 WORK WITH THAT OF ALL OTHER DIVISIONS OF WORK.
C. THE DRAWINGS AND SPECIFICATIONS ARE INTENDED TO SUPPLEMENT EACH OTHER. ANY LABOR OR MATERIAL CALLED FOR IN ONE SHALL BE FURNISHED AND INSTALLED EVEN THOUGH NOT SPECIFICALLY MENTIONED IN BOTH. ANY LABOR OR MATERIAL WHICH IS NEITHER SHOWN ON THE DRAWINGS OR CALLED FOR IN THE SPECIFICATIONS, BUT WHICH IS OBVIOUSLY REQUIRED TO COMPLETE THE WORK, AND WHICH IS NORMALLY INCLUDED IN WORK OF SIMILAR CHARACTER, SHALL BE FURNISHED AND INSTALLED AS PART OF THIS CONTRACT.
D. THE CONTRACTOR IS RESPONSIBLE FOR SCHEDULING THE COMPLETION AND INSPECTION OF THIS WORK TO COMPLY WITH THE OWNER'S SCHEDULE AND PROJECT COMPLETION DATE.
1.2 SCOPE OF WORK
A. THE DESCRIPTION OF GENERAL CONDITION WORK IN THIS DIVISION SHALL ALSO APPLY TO DIVISIONS 21 AND 23.
B. THIS CONTRACTOR SHALL PROVIDE ALL LABOR, MATERIALS, EQUIPMENT, TRANSPORTATION, INCIDENTALS AND DETAILS NECESSARY TO PROVIDE A COMPLETE FIRE PROTECTION, PLUMBING AND HVAC SYSTEM AS SHOWN ON THE DRAWINGS, CALLED FOR IN THE SPECIFICATIONS AND AS REQUIRED BY JOB CONDITIONS. WORK IS TO BE COMPLETE IN EVERY RESPECT, WHETHER SPECIFICALLY MENTIONED IN THE CONTRACT DOCUMENTS OR NOT.
C. ALL WORK NOT SPECIFICALLY NOTED AS BEING BY THE OWNER (BUILDING OWNER, LANDLORD OR TENANT), SHALL BE PROVIDED BY THIS CONTRACTOR.
D. THIS WORK, MATERIALS AND EQUIPMENT INCLUDES, BUT IS NOT LIMITED TO THE FOLLOWING ITEMS:
a. FIRE PROTECTION MODIFICATIONS AND ADDITIONS INCLUDING, BUT LIMITED TO PIPING, SPRINKLER HEADS AND CONTROL VALVES.
b. PLUMBING WORK INCLUDING, BUT NOT LIMITED TO WASTE AND VENT PIPING, DOMESTIC WATER SERVICE AND DISTRIBUTION, PLUMBING FIXTURES, WATER HEATERS AND ROUGH-IN/CONNECTION TO EQUIPMENT FURNISHED BY THE OWNER OR OTHER SECTIONS OF THE SPECIFICATIONS.
c. HEATING, VENTILATING AND AIR CONDITIONING SYSTEMS INCLUDING, BUT NOT LIMITED TO HEATING AND COOLING UNITS, VENTILATING SYSTEMS, COMPLETE DUCT SYSTEMS, GRILLES REGISTERS AND DIFFUSERS, INSULATION, ACCESSORIES AND TEMPERATURE CONTROL SYSTEMS.
1.3 CODES
A. ALL WORK SHALL CONFORM TO THE OWNER'S CRITERIA, STATE, COUNTY, CITY AND LOCAL CODES AND ORDINANCES, SAFETY AND HEALTH CODES, NFPA CODES, ENERGY CODES AND ALL OTHER APPLICABLE CODES AND REQUIREMENTS. THIS CONTRACTOR SHALL INQUIRE INTO AND COMPLY WITH ALL APPLICABLE CODES, ORDINANCES AND REGULATIONS. THIS CONTRACTOR SHALL INCLUDE ANY CHANGES REQUIRED BY CODES IN THE BID AND IF THESE CHANGES ARE NOT INCLUDED IN THE BID, THEY MUST BE QUALIFIED AS A SEPARATE LINE ITEM IN THE BID. AFTER CONTRACT IS AWARDED, CHANGE ORDERS FOR INCREASED COSTS DUE TO CODE ISSUES WILL NOT BE ACCEPTED UNLESS ALLOWANCES HAVE BEEN PREVIOUSLY AGREED UPON.
B. WHERE THE DRAWINGS AND SPECIFICATIONS CALL FOR ITEMS WHICH EXCEED CODE OR THE OWNER'S CRITERIA, THE CONTRACTOR IS RESPONSIBLE FOR FURNISHING AND INSTALLING THE SYSTEM WITH THE MORE STRINGENT REQUIREMENTS.
1.4 LICENSES, PERMITS, INSPECTIONS AND FEES
A. THIS CONTRACTOR SHALL OBTAIN AND PAY FOR ALL LICENSES, PERMITS, INSPECTIONS AND FEES REQUIRED OR RELATED TO THIS WORK. ALL COSTS ASSOCIATED WITH THESE SHALL BE PAID FOR BY THE CONTRACTOR AND INCLUDED AS PART OF THE BID.
B. FURNISH TO THE OWNER ALL CERTIFICATES OF INSPECTION AND FINAL INSPECTION APPROVAL AT THE COMPLETION OF THE PROJECT.
1.5 GUARANTEE
A. ALL MATERIALS, EQUIPMENT AND WORKMANSHIP SHALL BE GUARANTEED FOR A PERIOD OF 1 YEAR FROM THE DATE OF ACCEPTANCE (OFFICIAL DATE IN WRITING) OF THIS PROJECT. ALL WORK FOUND TO BE DEFECTIVE SHALL BE REPAIRED OR REPLACED BY THE CONTRACTOR AT NO COST TO THE OWNER.
B. WHERE SPECIFIC EQUIPMENT IS NOTED TO HAVE EXTENDED WARRANTIES, THE CONTRACTOR SHALL BE RESPONSIBLE FOR THE PROPER REGISTRATION SO THE OWNER CAN MAKE ALL APPROPRIATE CLAIMS.
1.6 RECORD DRAWINGS
A. THIS CONTRACTOR SHALL MAINTAIN ONE SET OF DRAWINGS ON THE JOBSITE, UPDATED WEEKLY, TO RECORD ALL DEVIATIONS FROM THE CONTRACT DOCUMENTS SUCH AS:
a. LOCATIONS OF CONCEALED PIPING AND DUCTS
b. REVISIONS, ADDENDUMS AND CHANGE ORDERS
c. SIGNIFICANT DEVIATIONS MADE NECESSARY BY FIELD CONDITIONS, APPROVED EQUIPMENT SUBSTITUTIONS, AND CONTRACTOR'S COORDINATION WITH OTHER TRADES.
B. DELIVER RECORD DRAWINGS TO THE OWNER AT PROJECT COMPLETION.
1.7 DEMOLITION
A. THIS CONTRACTOR SHALL BE RESPONSIBLE FOR THE COORDINATION OF THE DEMOLITION OF EXISTING WORK AND THE DEMOLITION PROVIDED BY THE GENERAL CONTRACTOR. COORDINATE WITH THE GENERAL CONTRACTOR ALL EXISTING EQUIPMENT REQUIRED TO BE LEFT INTACT.
B. THIS CONTRACTOR SHALL INCLUDE AND BE RESPONSIBLE FOR THE REMOVAL OF ALL FIRE PROTECTION, PLUMBING AND HVAC SYSTEMS NOTED ON THE DRAWINGS OR REQUIRED TO ACCOMPLISH THE STATED WORK.
PART 2 - PRODUCTS
2.1 MATERIALS
A. MATERIALS UTILIZED IN THE CONSTRUCTION OF THIS PROJECT SHALL BE NEW AND CARRY UL LABELS WHERE APPLICABLE, UNLESS APPROVED BY THE OWNER.
B. ANY USED EQUIPMENT OR MATERIALS USED SHALL STILL CARRY THE SPECIFIED 1 YEAR GUARANTEE AND APPROVAL OF THE USE OF THIS EQUIPMENT OR MATERIALS DOES NOT RELIEVE THE CONTRACTOR FROM ENSURING EVERYTHING IS OPERATIONAL.
2.2 MANUFACTURERS
A. WHERE TRADE NAMES OR MANUFACTURERS ARE USED ON THE DRAWINGS OR IN THE SPECIFICATIONS, THE EXACT EQUIPMENT SHALL BE CONSIDERED THE BASIS OF DESIGN AND USED AS A MINIMUM FOR THE BASE BID. MANUFACTURERS CONSIDERED AS AN EQUAL OR BETTER IN ALL ASPECTS TO THAT SPECIFIED, WILL BE SUBJECT TO APPROVAL IN WRITING BY THE ENGINEER THROUGH THE SHOP DRAWING SUBMITTAL PROCESS, FOR ACCEPTANCE PRIOR TO INSTALLATION. THE USE OF ANY UNAUTHORIZED EQUIPMENT SHALL BE REPLACED AT THE CONTRACTOR'S EXPENSE.
2.3 SLEEVES
A. PROVIDE SLEEVES TO PROTECT EQUIPMENT OR FACILITIES IN THE INSTALLATION. EACH SLEEVE SHALL EXTEND THROUGH ITS RESPECTIVE FLOOR, WALL OR PARTITION AND SHALL BE CUT FLUSH WITH EACH SURFACE EXCEPT SLEEVES THAT PENETRATE THE FLOOR, WHICH SHALL EXTEND 2 INCHES ABOVE THE FLOOR.
B. CONTRACTOR SHALL COORDINATE THROUGH THE GENERAL CONTRACTOR AND OWNER ANY CORE DRILLING OR CUTTING OF OPENINGS IN MASONRY WALLS OR CONCRETE FLOORS.
C. ALL SLEEVES AND OPENINGS THROUGH FIRE RATED WALLS AND FLOORS SHALL BE FIRED SEALED. REFER TO "FIRE STOPPING."
D. SLEEVES IN BEARING AND MASONRY WALLS, FLOORS AND PARTITIONS SHALL BE STANDARD WEIGHT STEEL PIPE FINISHED WITH SMOOTH EDGES. FOR OTHER THAN MASONRY PARTITIONS, THROUGH SUSPENDED CEILINGS, OR FOR CONCEALED VERTICAL PIPING, SLEEVES SHALL BE MINIMUM NO. 22 USG GALVANIZED STEEL.
2.4 FLAME SPREAD PROPERTIES OF MATERIALS
A. MATERIALS USED ON THIS PROJECT SHALL EACH HAVE A FLAME SPREAD RATING OF 25 OR LESS, AND A SMOKE DEVELOPED RATING OF 50 OR LESS, AS DETERMINED BY AN INDEPENDENT TESTING LABORATORY IN ACCORDANCE WITH NFPA-255.
2.5 FIRE STOPPING
A. PROVIDE FIRE STOPPING IN SEALING OF PENETRATIONS IN FIRE-RATED CONSTRUCTION, HORIZONTAL AND VERTICAL, INCLUDING THE FOLLOWING MATERIALS:
a. FOAM: DOW CORNING FIRESTOP SILICONE RTV FOAM, CAT #2001 LIQUID COMPONENT PART A (BLACK) AND LIQUID COMPONENT PART B (OFF-WHITE).
b. SEALANT: 3M 1000 NS AND 1003 SL SILICONE ADHESIVE SEALANT.
c. DAMMING MATERIALS: MINERAL FIBERBOARD, MINERAL FIBER MATTING, MINERAL FIBER PUTTY, PLYWOOD OR PARTICLE BOARD, AS SELECTED BY THE APPLICATOR.
B. MIXES SHALL CONFORM TO THE MANUFACTURER'S DIRECTIONS.
2.6 FLOOR, CEILING AND WALL PLATES
A. PROVIDE CHROME-PLATED, ONE-PIECE, ESCUTCHEONS ON PIPES AND HANGER RODS PENETRATING WALLS, FLOORS AND CEILINGS IN FINISHED AREAS OF THE BUILDING. SPLIT RING ESCUTCHEONS ARE NOT ACCEPTABLE.
2.7 DIELECTRIC CONNECTIONS
A. CONNECTIONS BETWEEN FERROUS AND NON-FERROUS PIPING SYSTEMS, AND BETWEEN FERROUS PIPING SYSTEMS AND NON-FERROUS CONNECTIONS TO EQUIPMENT SHALL BE MADE BY THE USE OF DIELECTRIC UNIONS, COUPLINGS OR FLANGES.
2.8 EQUIPMENT FOUNDATIONS AND SUPPORTS
A. PROVIDE FOUNDATIONS AND SUPPORTS FOR MECHANICAL EQUIPMENT AS REQUIRED. THESE SHALL INCLUDE REINFORCED CONCRETE HOUSEKEEPING PADS FOR ANY PUMPS OR AIR HANDLING UNITS INSTALLED INDOORS ON THE FLOOR. PADS SHALL EXTEND A MINIMUM OF 3 INCHES BEYOND EQUIPMENT IN ALL DIRECTIONS.

PART 3 - EXECUTION
3.1 SPACE AND EQUIPMENT ARRANGEMENT
A. EACH CONTRACTOR SHALL BE RESPONSIBLE TO SEE THAT THEIR PURCHASED EQUIPMENT WILL FIT THE SPACES AVAILABLE. IN CERTAIN INSTANCES NOTE THAT THE EQUIPMENT IS MENTIONED BY NAME IN THE EQUIPMENT SCHEDULES. IN THESE CASES IT IS THAT EQUIPMENT WHOSE DIMENSIONS AND CONNECTION ARRANGEMENTS HAVE BEEN USED FOR THE PREPARATION OF THE LAYOUTS SHOWN ON THE WORKING DRAWINGS. SHOULD THE USE OF EQUIPMENT BY OTHER APPROVED MANUFACTURERS OR OF OTHER PHYSICAL SHAPE THAN THOSE SHOWN ON THE DRAWINGS BE PROPOSED, THE CONTRACTOR SHALL CONFIRM THE EQUIPMENT WILL FIT WITHIN THE ALLOTTED SPACE WITHOUT ARCHITECTURAL MODIFICATIONS OR IMPACT ON OTHER TRADES.
B. ALL WORK SHALL BE INSTALLED SO AS TO BE READILY ACCESSIBLE FOR OPERATING, SERVICING, MAINTAINING, AND REPAIRING. PROVIDE SUFFICIENT SERVICE ACCESS TO ALL EQUIPMENT.
C. BEFORE STARTING WORK THIS CONTRACTOR SHALL EXAMINE THE ARCHITECTURAL, STRUCTURAL, POWER, LIGHTING AND FIRE ALARM PLANS, SHOP DRAWINGS AND SPECIFICATIONS TO SEQUENCE, COORDINATE AND INTEGRATE THE VARIOUS ELEMENTS OF THE MECHANICAL SYSTEMS TO AVOID INTERFERENCES AND CONFLICTS.
3.2 MANUFACTURER'S DIRECTIONS
A. THE MANUFACTURER'S PUBLISHED DIRECTIONS SHALL BE FOLLOWED IN THE DELIVERY, STORAGE, PROTECTION, INSTALLATION, PIPING AND WIRING OF ALL EQUIPMENT AND MATERIAL. THE CONTRACTOR SHALL PROMPTLY NOTIFY THE OWNER IN WRITING OF ANY CONFLICT BETWEEN THE REQUIREMENTS OF THE CONTRACT DOCUMENTS AND THE MANUFACTURER'S DIRECTIONS, AND SHALL OBTAIN INSTRUCTIONS BEFORE PROCEEDING WITH THE WORK. SHOULD THE CONTRACTOR PERFORM ANY WORK BEFORE RECEIVING SUCH INSTRUCTIONS, HE SHALL BEAR ALL COSTS ARISING IN CONNECTION WITH THE DEFICIENCIES.
3.3 CONSTRUCTION REQUIREMENTS
A. THE DRAWINGS AND SPECIFICATIONS SHOW PIPE AND DUCT SIZES, GENERAL ROUTING AND LOCATION, AND DESCRIBE THE VARIOUS SYSTEMS. THESE DOCUMENTS DESCRIBE AND SIZE EQUIPMENT, ITS GENERAL LOCATION, USAGE, SUPPORT AND AUXILIARY REQUIREMENTS. THEY DESCRIBE MOST, BUT NOT ALL OF THE MATERIALS AND THEIR USAGE FOR THIS PROJECT.
B. CONTRACT DOCUMENTS DO NOT DETAIL ALL JOB REQUIREMENTS. THEY DO NOT SHOW LAYOUTS, LOCATIONS OR ELEVATIONS OF DUCTS, ANCHORS, SLEEVES, HANGERS, UNDERFLOOR DRAINS, OR ACCESS DOORS. THEY DO NOT SHOW FINAL PRECISE LOCATIONS OF EQUIPMENT BY DIMENSIONS IN ALL INSTANCES.
C. THE EXACT LOCATION OF EACH ITEM SHALL BE DETERMINED BY REFERENCE TO THE PROJECT CONTRACT DRAWINGS, AND TO DETAILS, EQUIPMENT DRAWINGS, AND ROUGH-IN DRAWINGS, BY MEASUREMENTS AT THE BUILDING, AND IN COOPERATION WITH THE VARIOUS TRADES. MINOR RELOCATION NECESSITATED BY THE CONDITIONS AT THE SITE OR DIRECTED BY THE OWNER SHALL BE MADE WITHOUT ADDITIONAL COST TO THE OWNER. WHERE CONFLICTS OCCUR, WORK WITH ALL INVOLVED TRADES AND RESOLVE THE CONFLICT PRIOR TO ERECTION OF ANY WORK IN THE AREA INVOLVED.
3.4 FABRICATION OF PIPE
A. PIPING SHALL FOLLOW AS CLOSELY AS POSSIBLE THE ROUTES SHOWN ON THE DRAWINGS, TAKING INTO CONSIDERATION CONDITIONS TO BE MET AT THE SITE.
B. SHOULD ANY UNFORESEEN CONDITIONS ARISE, PIPING SHALL BE CHANGED OR REROUTED AS REQUIRED AFTER PROPER APPROVAL HAS BEEN OBTAINED BY OWNER.
C. PIPING SHALL BE CLEANED WHEN IT IS INSTALLED. BEFORE INSTALLATION IT SHALL BE CHECKED, UP ENDED, SWABBED IF NECESSARY, AND ANY RUST AND DIRT REMOVED.
3.5 EQUIPMENT FOUNDATIONS, HANGERS AND SUPPORTS
A. FOR FLOOR MOUNTED MECHANICAL EQUIPMENT, PROVIDE CONCRETE HOUSEKEEPING PADS NOT LESS THAN 3-1/2 INCH THICK REINFORCED WITH NO. 3 DOWELS AND NO. 3 BARS, 2 FEET-0 INCHES ON CENTER EACH WAY.
B. SUSPENDED EQUIPMENT SHALL HAVE SUPPORTS CONSISTING OF MANUFACTURED METAL FRAMING OR HANGERS CONFORMING TO SECTION 220529.
3.6 INSTRUCTIONS OF OWNER'S PERSONNEL
A. PROVIDE THE SERVICES OF COMPETENT ENGINEERS OR TECHNICIANS TO INSTRUCT REPRESENTATIVES OF THE OWNER IN COMPLETE AND DETAILED OPERATION AND MAINTENANCE OF EACH ITEM OF EQUIPMENT AND EACH SYSTEM.
B. THE CONTRACTOR SHALL BE FULLY RESPONSIBLE FOR PROPER MAINTENANCE OF EQUIPMENT AND SYSTEMS UNTIL THE INSTRUCTIONS HAVE BEEN GIVEN TO THE OWNER'S PERSONNEL AND THE LETTER OF RELEASE ACKNOWLEDGED.
C. PROVIDE OPERATION & MAINTENANCE MANUALS (3 COPIES), ALONG WITH AS-BUILT SET OF PRINTS PRIOR TO SUBSTANTIAL COMPLETION OF THE PROJECT.
3.7 ELECTRIC WIRING OF MOTORS AND EQUIPMENT
A. LOW VOLTAGE HVAC CONTROL WIRING WILL BE INSTALLED BY THE HVAC CONTRACTOR WITH FINAL CONNECTION TO THE HVAC EQUIPMENT BY THE HVAC CONTRACTOR. THE ELECTRICAL CONTRACTOR SHALL FURNISH ALL DISCONNECT SWITCHES AS REQUIRED FOR THE PROPER OPERATION OF THE EQUIPMENT UNLESS SUCH EQUIPMENT IS SPECIFIED TO BE PROVIDED WITH FACTORY MOUNTED DISCONNECT SWITCHES.
B. THE ELECTRICAL DESIGN AND DRAWINGS ARE BASED ON THE EQUIPMENT SCHEDULED AND SHOWN ON THE DRAWINGS, SHOULD ANY CONTRACTOR SUBMIT FOR APPROVAL EQUIPMENT REQUIRING CHANGES TO THE ELECTRICAL DESIGN FOR WHICH THE ELECTRICAL CONTRACTOR WILL REQUEST AN EXTRA, THIS EXTRA SHALL BE PAID BY THE CONTRACTOR PROVIDING THE ALTERNATE EQUIPMENT REQUIRING THE CHANGE.
3.8 QUIET OPERATION
A. THIS WORK SHALL BE INSTALLED IN SUCH A MANNER THAT UNDER ALL CONDITIONS OF LOAD IT SHALL OPERATE WITHOUT SOUND OR VIBRATION, WHICH IS OBJECTIONABLE IN THE OCCUPIED SPACES IN THE OPINION OF THE OWNER. IN THE CASE OF MOVING MACHINERY, SOUND OR VIBRATION ANNOYINGLY NOTICEABLE INSIDE ITS OWN ROOM CAN BE CONSIDERED AS OBJECTIONABLE. IN ANY CASE, SITUATION SHALL BE REMEDIED AT NOT COST TO THE OWNER.
3.9 CUTTING AND PATCHING
A. PROVIDE ALL CUTTING, CHASING AND CHANNELING REQUIRED FOR ANY WORK UNDER THIS DIVISION. CUTTING SHALL HAVE PRIOR APPROVAL FROM ARCHITECT AND OWNER.
B. ALL PATCHING SHALL BE BY GENERAL CONTRACTOR AND SHALL MATCH THE SURROUNDING SURFACES.

3.10 TESTS
A. THE CONTRACTOR INSTALLING THE PLUMBING SYSTEMS SHALL FOLLOW ALL TESTS AS REQUIRED TO PROVE COMPLIANCE WITH ALL LOCAL CODES. TESTS PERFORMED SHALL BE EQUAL TO OR EXCEED THAT HEREINAFTER SPECIFIED. ALL PIPING SYSTEMS SHALL BE TESTED BEFORE THEY ARE COVERED OR MADE UNAVAILABLE FOR THE COMPLETE INSPECTION OF ALL JOINTS. IN ADDITION TO THE ABOVE, EACH AND EVERY SYSTEM TO BE INSULATED SHALL BE THOROUGHLY TESTED BEFORE THE INSTALLATION IS APPLIED.
B. DOMESTIC WATER PIPING SYSTEM: UPON COMPLETION OF A SECTION OF THE ENTIRE WATER SUPPLY SYSTEM, IT SHALL BE TESTED AND PROVED TIGHT UNDER A WATER PRESSURE OF 125 PSIG, BUT NOT LESS THAN 10 PERCENT IN EXCESS OF THE WORKING PRESSURE UNDER WHICH IT IS TO BE USED. THE WATER USED FOR TESTS SHALL BE OBTAINED FROM A POTABLE SOURCE OF SUPPLY.
C. SANITARY SYSTEMS: ALL SANITARY SEWER SYSTEMS SHALL BE TESTED EITHER IN SECTIONS OR IN THEIR ENTIRETY IN ACCORDANCE WITH ALL THE REQUIREMENTS OF THE LOCAL PLUMBING CODE AND TO THE SATISFACTION OF THE LOCAL PLUMBING INSPECTOR. THESE TESTS SHALL BE EXAMINED IF DESIRED BY THE ARCHITECT OR HIS REPRESENTATIVE DURING THE TEST PERIOD AND AMPLE NOTICE OF PERFORMANCE OF THESE TESTS SHALL BE GIVEN.

END OF SECTION.

SECTION 220523 - GENERAL DUTY VALVES
PART 1 - GENERAL
1.1 SCOPE OF WORK
A. REFER TO SECTION 220500.

PART 2 - PRODUCTS
2.1 WATER SYSTEM VALVES
A. DOMESTIC, CHILLED, HOT, AND CONDENSER WATER SYSTEMS: PROVIDE VALVES, WHERE SHOWN ON THE DRAWINGS AND ELSEWHERE AS SPECIFIED OR REQUIRED, TO PROVIDE ISOLATION OF EQUIPMENT AND FIXTURES AND TO PROVIDE DRAINAGE OF LOW POINTS IN WATER LINES. VALVES SHALL BE IN ACCORDANCE WITH THE FOLLOWING DETAILED SPECIFICATIONS:
a. SIZES 2 INCH AND SMALLER: BALL VALVE: NIBCO S85-70, FULL PORT, BRONZE BODY WITH STAINLESS STEEL TRIM.
b. SIZES 2 INCH AND SMALLER: CHECK VALVE: NIBCO S-433 CLASS 150, BRONZE.
c. SIZES 2-1/2 INCH AND LARGER: BUTTERFLY VALVE: NIBCO LC2000 LUG STYLE, CAST IRON, 200 PSIG WITH STAINLESS STEEL TRIM AND EPDM SEAT.
d. SIZES 2-1/2 INCH AND LARGER: CHECK VALVE: NIBCO F-918-B CAST IRON, FLANGED, 200 PSIG WITH BRONZE TRIM.

PART 3 - EXECUTION
3.1 INSTALLATION
A. VALVES SHALL BE INSTALLED IN ACCORDANCE WITH THE MANUFACTURERS' RECOMMENDATIONS, AND IN SUCH MANNER AS TO PERMIT DISASSEMBLY, REMOVAL, REASSEMBLY AND REPLACEMENT.

END OF SECTION.

SECTION 220529 - HANGERS AND SUPPORTS
PART 1 - GENERAL
1.1 SCOPE OF WORK
A. REFER TO SECTION 220500.

PART 2 - PRODUCTS
2.1 GENERAL
A. PIPE HANGERS AND SUPPORTS SHALL CONFORM TO THE RECOMMENDATIONS OF ASHRAE, ASPE, ANSI AND MSS.
B. PROVIDE FACTORY-FABRICATED PIPE HANGERS AND SUPPORTS IN WHICH MATERIALS, DESIGN AND MANUFACTURE COMPLY WITH ANSI/MSS SP-58. SELECT AND APPLY PIPE HANGERS AND SUPPORTS IN COMPLIANCE WITH MSS SP-69, AND MANUFACTURER'S PUBLISHED PRODUCT INFORMATION. FABRICATE AND INSTALL PIPE HANGERS AND SUPPORTS IN COMPLIANCE WITH MSS SP-89.
C. USE ONLY ONE TYPE OF HANGER AND SUPPORT, BY ONE MANUFACTURER, FOR EACH PIPING SERVICE.
D. PROVIDE COPPER-PLATED HANGERS AND SUPPORTS FOR COPPER PIPING SYSTEMS WHERE HANGERS ARE IN CONTACT WITH BARE PIPE.
E. PROVIDE PROTECTIVE COATINGS ON HANGERS AND SUPPORTS WHEN LOCATED IN OUTDOOR AND/OR CORROSIVE ENVIRONMENTS. PROTECTIVE COATINGS SHALL BE AS RECOMMENDED BY THE COATING MANUFACTURER'S REQUIREMENTS.
2.2 HORIZONTAL PIPING HANGERS AND SUPPORTS
A. SELECT SIZE OF HANGERS AND SUPPORTS TO EXACTLY FIT PIPE SIZE FOR BARE PIPING, AND AROUND PIPING INSULATION WITH SADDLE OR SHIELD FOR INSULATED PIPING.
2.3 HANGER ROD ATTACHMENTS
A. SELECT SIZE OF HANGER ROD ATTACHMENTS TO SUIT HANGER RODS.
2.4 BUILDING ATTACHMENTS
A. SELECT SIZE AND TYPE OF BUILDING ATTACHMENTS TO SUIT HANGER RODS AND STRUCTURE.
2.5 PIPE INSULATION HANGER SHIELD INSERTS AND SUPPORTS
A. THERMAL HANGER INSERTS SHALL BE DESIGNED TO PREVENT INSULATION FROM BEING CRUSHED BY THE WEIGHT OF THE PIPING AND CONTENTS.
B. SHIELDS SHALL BE FIELD OR FACTORY FABRICATED OF GALVANIZED SHEET METAL.

PART 3 - EXECUTION
3.1 PREPARATION
A. PROCEED WITH INSTALLATION OF HANGERS, SUPPORTS AND ANCHORS ONLY AFTER REQUIRED BUILDING STRUCTURAL WORK HAS BEEN COMPLETED IN AREAS WHERE THE WORK IS TO BE INSTALLED.
3.2 INSTALLATION OF BUILDING ATTACHMENTS
A. INSTALL BUILDING ATTACHMENTS AT REQUIRED LOCATIONS, ON STRUCTURE FOR PROPER SUPPORT. SPACE ATTACHMENTS WITHIN MAXIMUM PIPING SPAN LENGTH SPECIFIED IN THIS SECTION. INSTALL ADDITIONAL BUILDING ATTACHMENTS WHERE SUPPORT IS REQUIRED FOR ADDITIONAL CONCENTRATED LOADS, INCLUDING VALVES, FLANGES, GUIDES, STRAINERS AND EXPANSION JOINTS. ALSO PROVIDE ATTACHMENTS AT CHANGES IN DIRECTION OF PIPING AND WHERE REQUIRED BY A LIMITED CARRYING CAPACITY OF THE STRUCTURE.
3.3 INSTALLATION OF HANGERS AND SUPPORTS
A. INSTALL HANGERS, SUPPORTS, CLAMPS AND ATTACHMENTS TO SUPPORT PIPING PROPERLY FROM BUILDING STRUCTURE IN COMPLIANCE WITH MSS SP-69. ARRANGE THE GROUPING OF PARALLEL RUNS OF HORIZONTAL PIPING TO BE SUPPORTED TOGETHER IN TRAPEZE-TYPE HANGERS WHERE POSSIBLE. WHERE PIPING OF VARIOUS SIZES ARE TO BE SUPPORTED TOGETHER BY TRAPEZE HANGERS, SPACE HANGERS FOR SMALLEST PIPE SIZE OR INSTALL INTERMEDIATE SUPPORTS FOR SMALL DIAMETER PIPE. DO NOT USE WIRE OR PERFORATED METAL TO SUPPORT PIPING, AND DO NOT SUPPORT PIPING FROM OTHER PIPING.
B. INSTALL HANGER AND SUPPORTS COMPLETE WITH NECESSARY BOLTS, RODS, NUT WASHERS AND OTHER ACCESSORIES. EXCEPT AS OTHERWISE INDICATED FOR EXPOSED CONTINUOUS RUNS, INSTALL HANGERS AND SUPPORTS OF SAME TYPE AND STYLE AS INSTALLED FOR ADJACENT SIMILAR PIPING.
C. SUPPORT FIRE PROTECTION WATER PIPING INDEPENDENTLY OF OTHER PIPING.
3.4 PROVISIONS FOR MOVEMENT
A. INSTALL HANGERS AND SUPPORTS TO ALLOW MOVEMENT OF PIPING SYSTEMS AND TO PERMIT FREEDOM OF MOVEMENT BETWEEN PIPE ANCHORS, AND TO FACILITATE ACTION OF EXPANSION JOINTS, EXPANSION LOOPS, OFFSETS, EXPANSION BENDS AND SIMILAR UNITS.
B. INSTALL HANGERS AND SUPPORTS SO THAT PIPING, LOADING, AND STRESSES FROM MOVEMENT WILL NOT BE TRANSMITTED TO CONNECTED EQUIPMENT
3.5 INSULATED PIPING REQUIREMENTS
A. HANGERS FOR INSULATED COLD PIPING SHALL BE PLACED AROUND THE OUTSIDE OF THE INSULATION AND VAPOR BARRIER.
a. PROVIDE A 180 DEGREE THERMAL INSERT ON THE BOTTOM OF THE PIPE. EXTEND VAPOR BARRIER ON TOP OF INSERT AND INSULATION AND PROVIDE INSULATION SHIELD BETWEEN INSERT AND HANGER.
B. HANGERS FOR OTHER INSULATED PIPING MAY BE PLACED DIRECTLY AGAINST THE PIPING WITH INSULATION CARRIED COMPLETELY OVER AND AROUND HANGER AND ROD.
3.6 HANGER SPACING AND ROD SIZES
A. HANGERS SHALL BE SPACED SO AS TO SUPPORT PIPING PROPERLY. CAST IRON SOIL PIPES SHALL BE SUPPORTED ON HANGERS SPACED NOT MORE THAN PIPE LENGTH BEING EMPLOYED. HANGERS FOR ALL OTHER COPPER OR STEEL PIPING SHALL BE SPACED ACCORDING TO THE FOLLOWING SCHEDULE:

PIPE SIZE	MAXIMUM HANGER SPACING	MINIMUM ROD SIZE
1/2 INCH	5 FEET	3/8 INCH
3/4 INCH	5 FEET	3/8 INCH
1 INCH	6 FEET	3/8 INCH
1-1/4 INCH	6 FEET	3/8 INCH
1-1/2 INCH	8 FEET	3/8 INCH
2 INCH AND LARGER	8 FEET	1/2 INCH

C. AT NO TIME SHALL ANY SECTION OF PIPE HAVE LESS THAN TWO SUPPORTS.

END OF SECTION.

SECTION 220553 - IDENTIFICATION
PART 1 - GENERAL
1.1 SCOPE OF WORK
A. REFER TO SECTION 220500.
B. LABEL ALL NEW EQUIPMENT AND PIPING SYSTEMS.

PART 2 - PRODUCTS
2.1 PIPE LABELS
A. PRETENSION PIPE LABELS OF SEMI-RIGID PLASTIC FORMED TO COVER THE FULL CIRCUMFERENCE OF PIPE.
B. IDENTIFY THE SERVICE AND DIRECTION OF FLOW. LABELS SHALL CONTAIN AT LEAST ½ INCH HIGH LETTERING AND BE PLACED SO THEY ARE EASY TO READ.
2.2 VALVE TAGS
A. MULTILAYER, MULTICOLOR PLASTIC LABELS WITH MECHANICAL ENGRAVING AND CHAIN FOR ATTACHMENT TO VALVE.
2.3 EQUIPMENT LABELS
A. MULTILAYER, MULTICOLOR PLASTIC LABELS WITH MECHANICAL ENGRAVING AND HOLES FOR ATTACHMENT TO EQUIPMENT.

PART 3 - EXECUTION
3.1 PIPE LABELS
A. INSTALL PIPE LABELS WHERE PIPING IS EXPOSED OR ABOVE AN ACCESSIBLE CEILING AT MAXIMUM 20 FT. CENTERS.
3.2 VALVE TAGS
A. ATTACH TAGS TO VALVES USING CHAIN. PROVIDE A VALVE SCHEDULE FOR MOUNTING IN THE MECHANICAL ROOM.
3.3 EQUIPMENT LABELS
A. PERMANENTLY ATTACH LABELS TO EQUIPMENT. LOCATE WHERE LABEL CAN BE EASILY SEEN AND READ.

END OF SECTION.

SECTION 220700 - INSULATION
PART 1 - GENERAL
1.1 SCOPE OF WORK
A. REFER TO SECTION 220500.

PART 2 - PRODUCTS
2.1 INSULATION SCHEDULE AND INSTALLATION
A. ALL DOMESTIC HOT AND COLD WATER PIPING:
FOR PIPING 1-1/4 INCH AND SMALLER PROVIDE 1/2 INCH THICK RIGID FIBERGLASS, TYPE I, WITH WHITE ALL-SERVICE JACKET AND VAPOR BARRIER. PIPING 1-1/2 INCH AND GREATER REQUIRES 1 INCH THICK INSULATION. FITTINGS SHALL BE PRE-MOLDED OF THE SAME MATERIAL.
B. ALL CHILLED, HOT AND CONDENSER WATER PIPING: 1-1/2 INCH THICK RIGID FIBERGLASS, TYPE I, WITH WHITE ALL-SERVICE JACKET AND VAPOR BARRIER.
C. AIR CONDITIONING COOLING COIL CONDENSATE DRAINS: 1/2 INCH THICK ARMAFLEX WITH FITTINGS OF PRE-MOLDED MATERIAL.
D. REFRIGERANT SUCTION AND HOT-GAS LINES: 1-1/2 INCH THICK ARMAFLEX WITH FITTINGS OF PRE-MOLDED MATERIAL.
E. CONCEALED SUPPLY AIR AND MAKE-UP AIR DUCTWORK (INCLUDES EXPOSED DUCT IN MECHANICAL ROOMS): 2 INCH THICK FLEXIBLE FIBERGLASS WITH REINFORCED FOIL KRAFT JACKET AND VAPOR BARRIER. MINIMUM R VALUE SHALL BE 5.0.
F. EXPOSED RECTANGULAR SUPPLY DUCT IN PUBLIC AREAS: 2 INCH THICK, 3 LB/CU FT DENSITY, MINERAL FIBER BOARD WITH FSK JACKET. MINIMUM R VALUE SHALL BE 5.0.
G. DUCTLINER FOR TRANSFER AIR DUCTS: 1 INCH ACOUSTICAL DUCT LINING IN ACCORDANCE WITH SMACNA STANDARDS, OWENS-CORNING FIBERGLASS "AEROFLEX" NO. 200, OR EQUAL.

PART 3 - EXECUTION
3.1 INSTALLATION
A. INSTALLATION SHALL BE IN ACCORDANCE WITH MANUFACTURER'S INSTRUCTIONS.
B. DUCT LINER SHALL BE APPLIED TO THE INSIDE OF THE DUCT WITH HEAVY-DENSITY SID